NuMicro Learning Board Overview
學習板使用簡介

- 2013/2/28

課程大綱(Course Outline)

- NuMicro Cortex-M0 學習板 (Learning Board)
- 學習板之週邊線路圖 (schematics)
- 開發環境之安裝與使用(SDK installation)
- 學習板之應用程式範例 (Sample Codes)
- Keil開發環境中新計畫之建立

NuMicro Cortex-M0學習板　NU-LB-NUC140

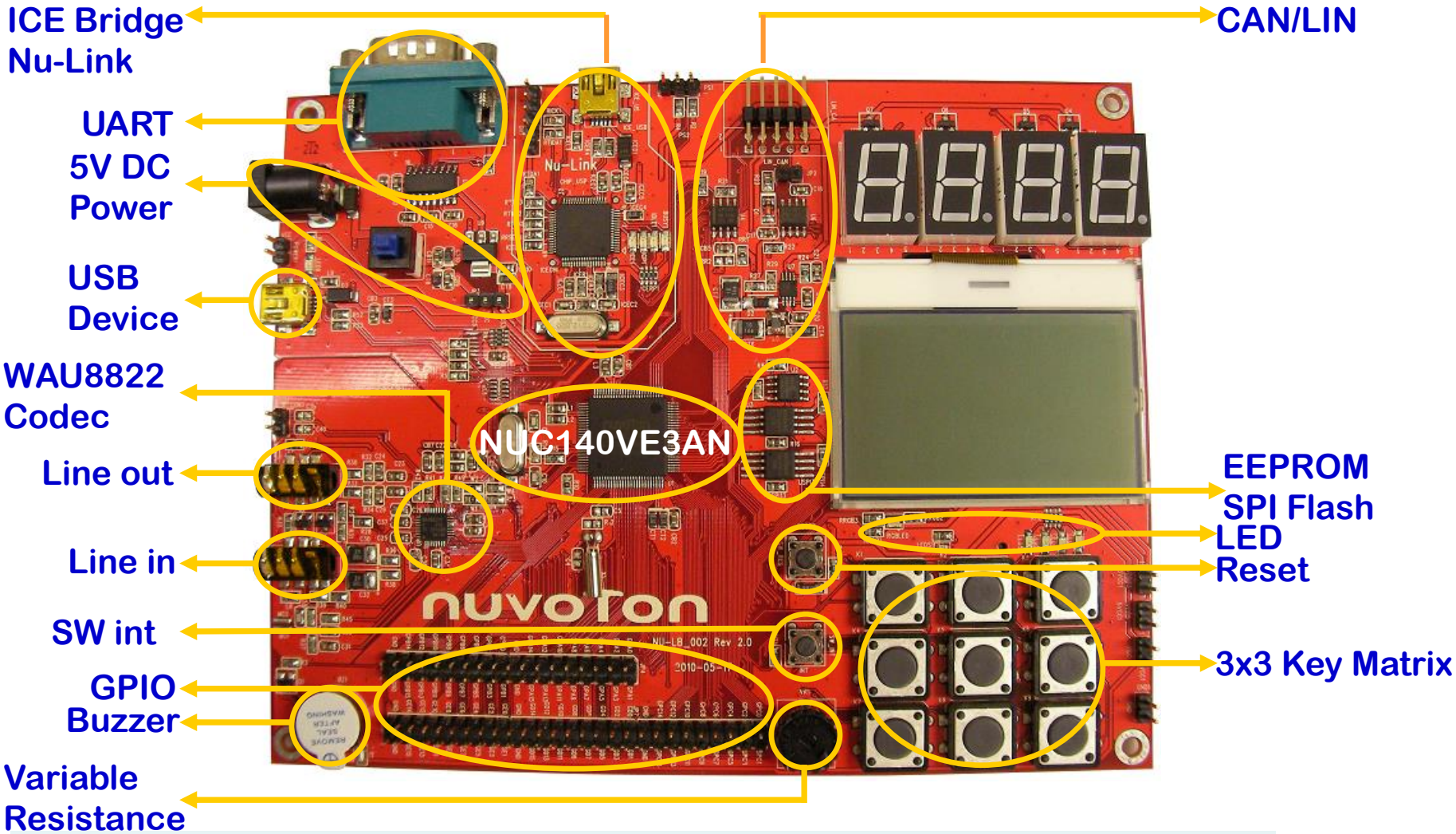

學習板上週邊的腳位使用表

Block	Pin	Function
ICE Bridge Nu-Link	ICE_CLK ICE DATA	SWD interface
UART	GPB0 GPB1	UART0 Rx UART0 Tx
WAU8822 codec	GPC0 GPC1 GPC2 GPC3 GPA15	I2SLRCLK I2SBCLK I2SDI I2SDO I2SMCLK
	GPA8 GPA9	I2C0 SDA I2C0 SCL
	GPE14	Line out Enable/Disable
	GPE15	Line in plug in/out detect
Key GPB15	GPB15	INT0
CAN	GPD6 GPD7	CAN0 Rx CAN0 Tx
	GPB12-13	CAN transceiver speed

學習板上週邊的腳位使用表

Block	Pin	Function
LIN	GPB4 GPB5	UART1 Rx UART1 Tx
	GPB6	LIN transceiver wakeup function
	GPB7	LIN transceiver Enable/Disable
7-Seg LED	GPE0-7	Row
	GPC4-7	Column
Black Dot Matrix LCD Panel	GPD8 GPD9 GPD10 GPD11	SPI3 SS30 SPI3 SPCLK SPI3 MISO0 SPI3 MOSI0
	GPD14	LCD backlight power
vartable Resistance	GPA7	ADC interface
Buzzer	GPB11	PWM4
Key Matrix	GPA0-5	GPIO
Reset	RESET	Reset

學習板上週邊的腳位使用表

Block	Pin	Function
EEPROM	GPA10 GPA11	I2C1 SDA I2C1 SCL
SO Slot	GPD12	SD power
	GPD13	SD card detect
	GPG8-11	SD interface
FLASH	GPD0 GPD1 GPD2 GPD3 GPD4 GPD5	SPI2 SS20 SPI2 SPCLK SPI2 MISO0 SPI2 MOSI0 SPI2 MISO1 SPI2 MOSI1
LED	GPA12 GPA13 GPA14	PWM0 PWM1 PWM2
	GPC12-15	GPIO

學習板之主要連接器

- 基本供電電源為5V
  - 主要由板子上內建之NuLink (ICE)電路之mini USB接頭連接PC來供電
  - 另可採用直流電源接頭CON5來供電
  - 亦可接NUC140單晶片之mini USB界面接頭J3
- 學習板之輸出電壓置於板子右下側排針處，提供+5V, +3.3V等電源，如電源由PC透過mini USB供電，最大電流為PC USB port 所限制(約500mA)
- **注意:** 一般實驗中，若過載導致電流過大，PC會將USB port斷電，故需將PC重開機，才會恢復該USB插槽之供電。

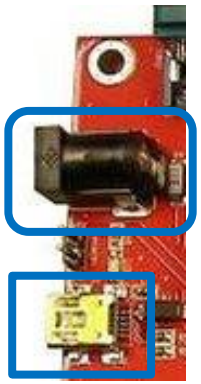

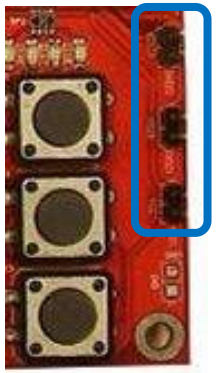

學習板之連接器說明

- 學習板上之符號定義 : VCC5 = +5V, VCC33 = +3V
- ICE_USB: 連接PC之NuLink 除錯埠(為mini USB)
- CON2: RS232 界面(NUC140單晶片連接PC之界面)
- CON5 : 直流電源接頭 (+5V)
- SW_POW : 直流電源開關 (控制CON5之電源開關)
- POWER1 : 系統電源 供給 +3V
- J3 : NUC140之USB介面接頭(NUC140單晶片連接PC之界面)
- J1 : audio 輸出(連接耳機)
- J2 : audio 輸入(連接麥克風)
- RESET : 重置按鈕 (位於LCD左下方)
- SW_INT : 軟體中斷按鈕(位於重置按鈕下方)

學習板之週邊線路圖

- 七段顯示器線路圖
- 64x128 LCD線路圖
- RGB LED線路圖
- Keypad & SW_INT線路圖
- UART/RS232線路圖
- I2C & Buzzer 線路圖
- SPI 線路圖
- PS2 & ADC 線路圖
- I2S 線路圖
- CAN＆LIN線路圖
- SD card 介面線路圖

7 段顯示器線路圖

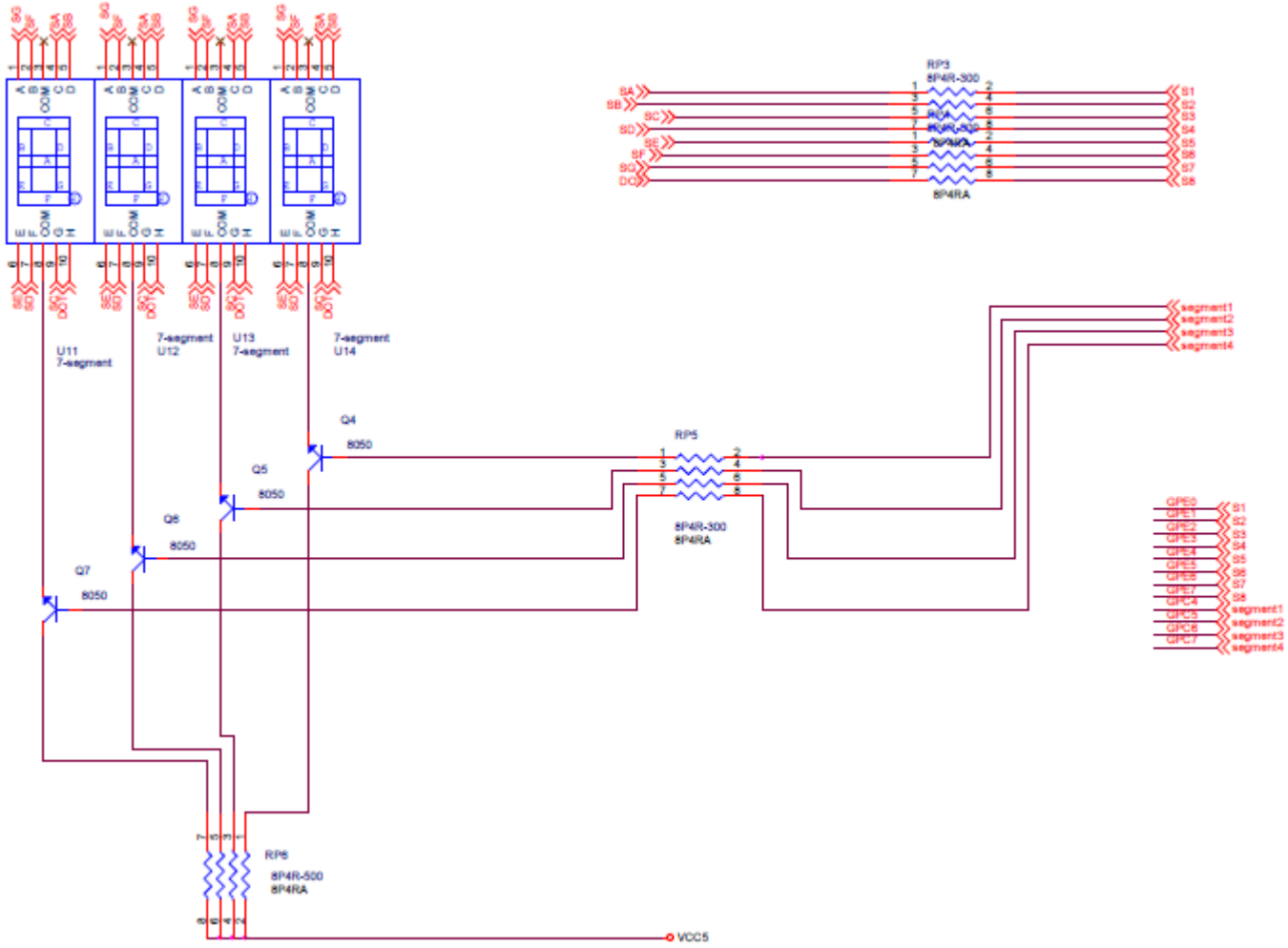

GPE0~7, GPC4~7

64x128 LCD線路圖

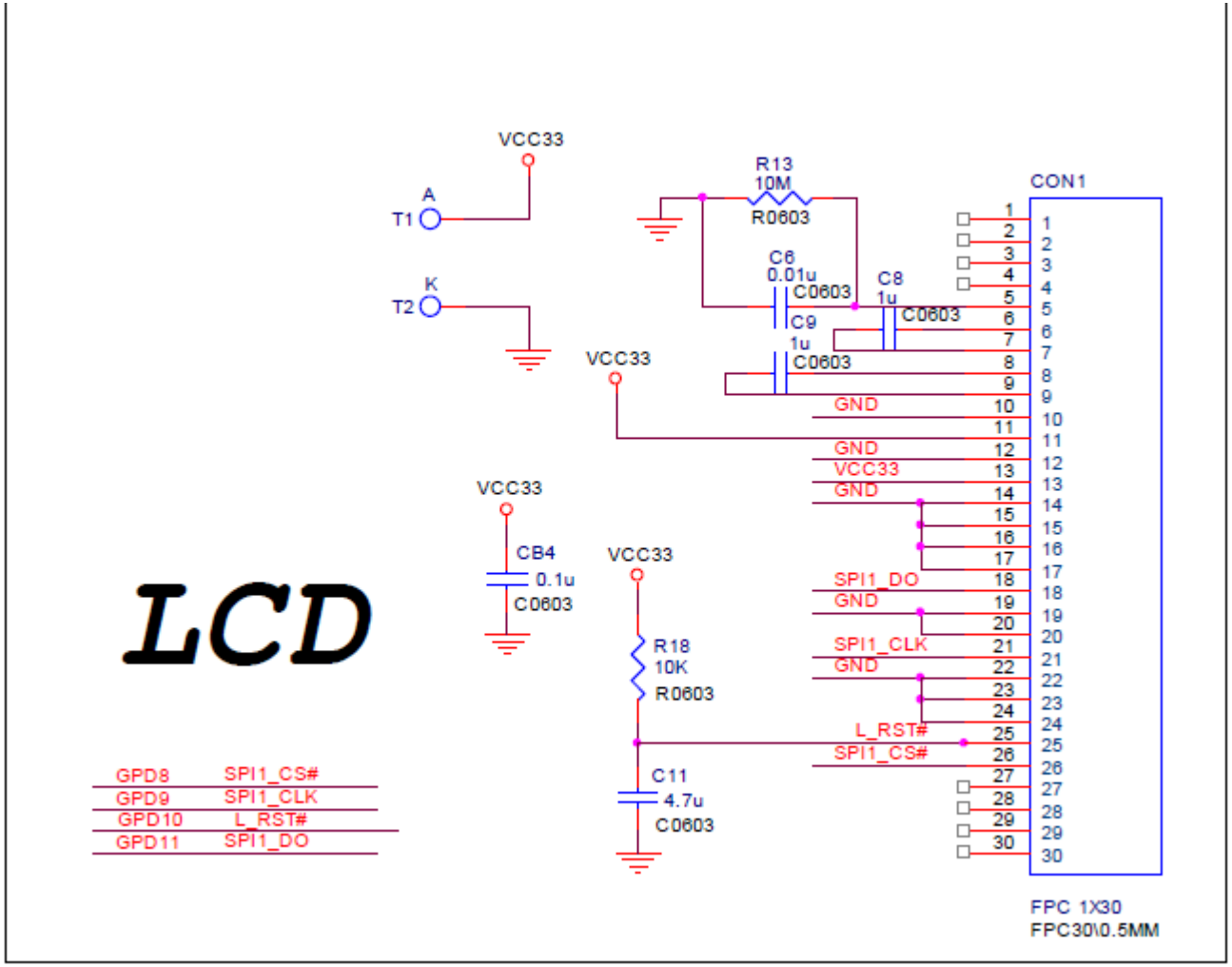

GPD8-11

RGB LED線路圖

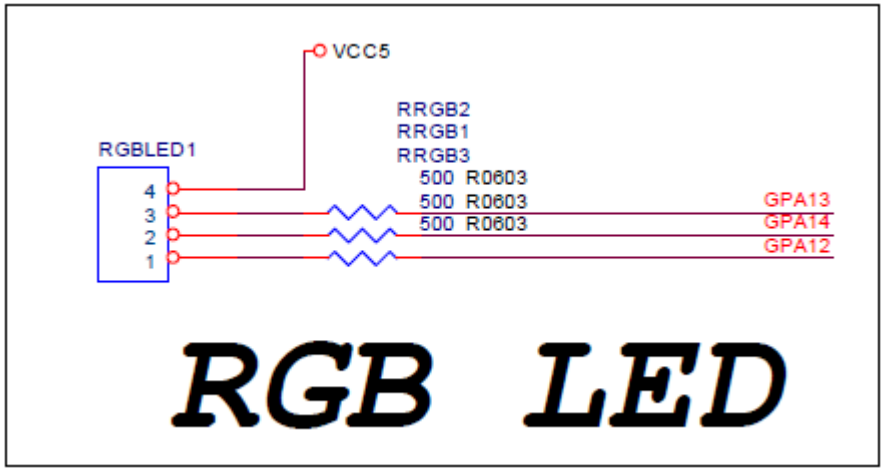
VCC5
RRGB2
RRGB1
RRGB3
RGBLED1
500 R0603
500 R0603
500 R0603
4
3
2
1
GPA13
GPA14
GPA12
RGB LED

Keypad & SW_INT線路圖

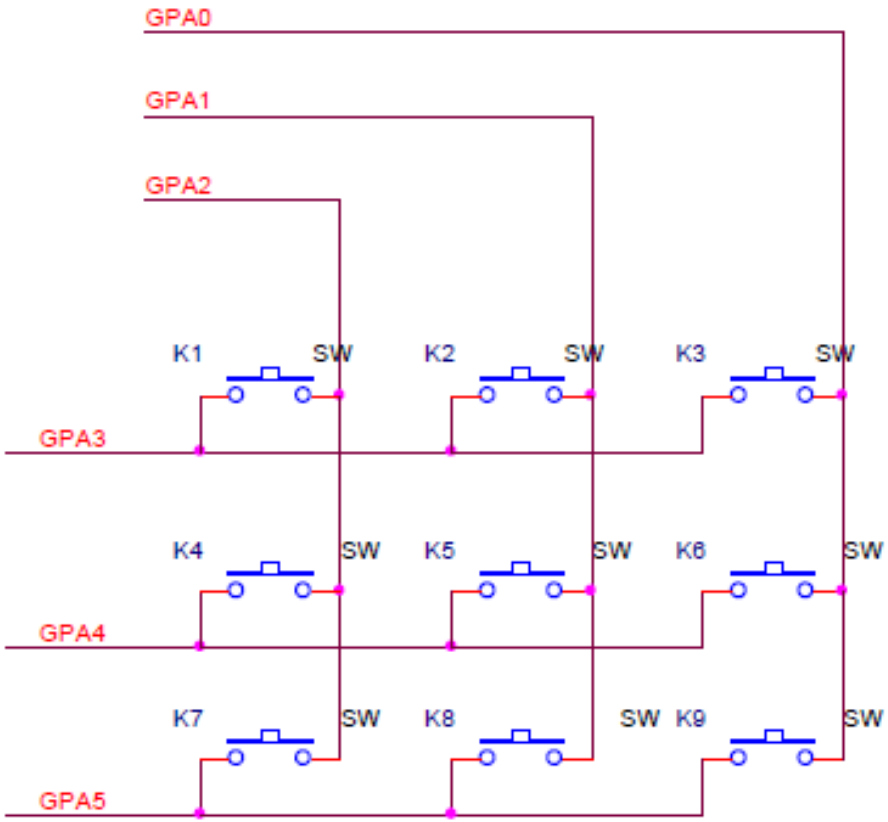

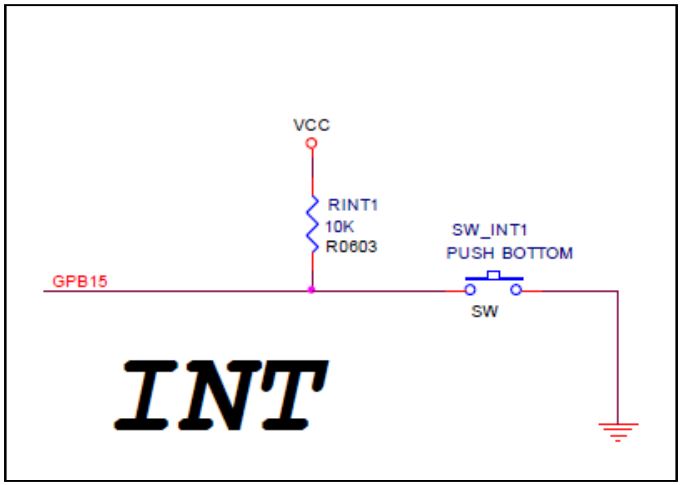

UART/RS232線路圖

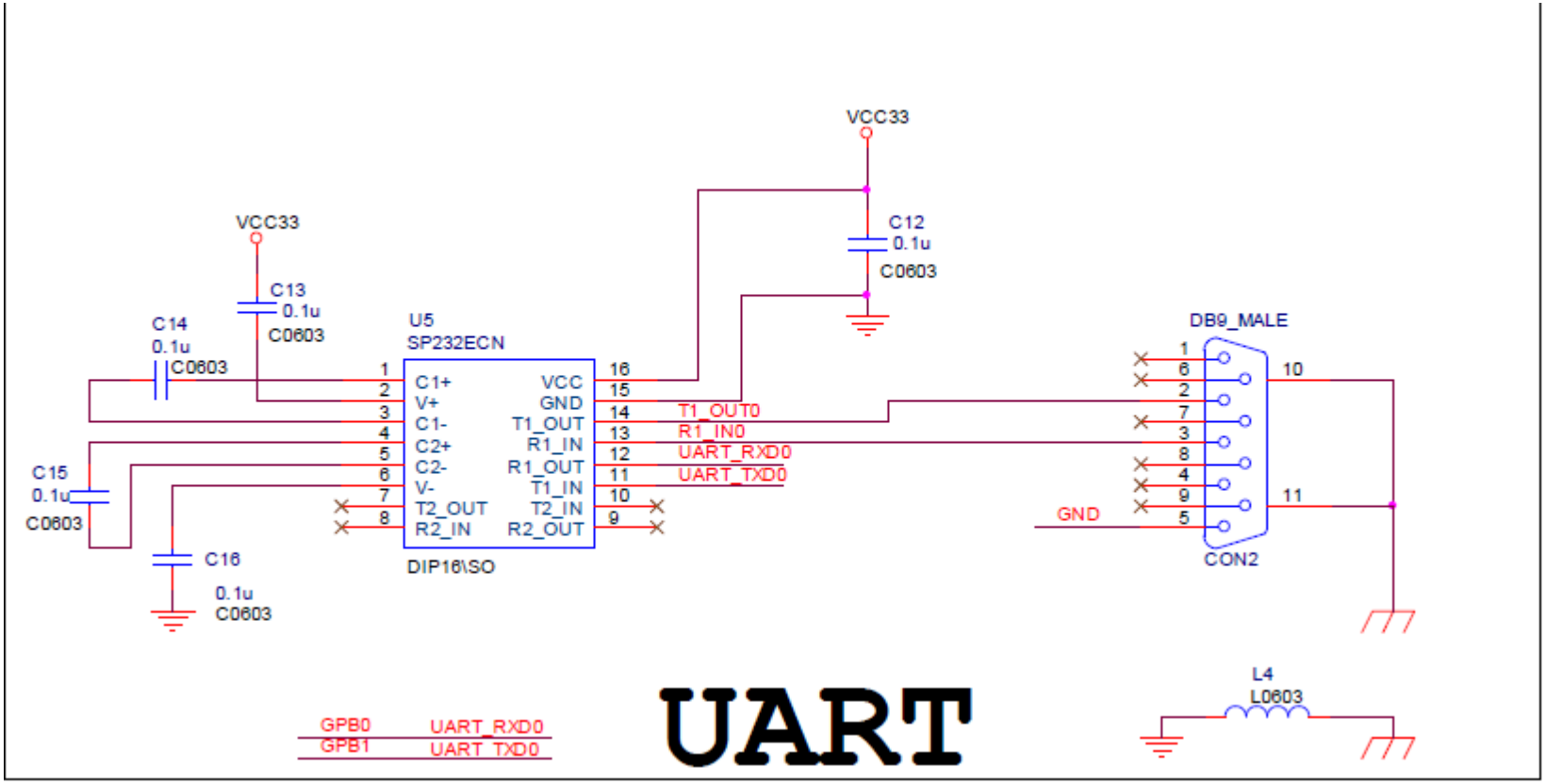

I2C & Buzzer 線路圖

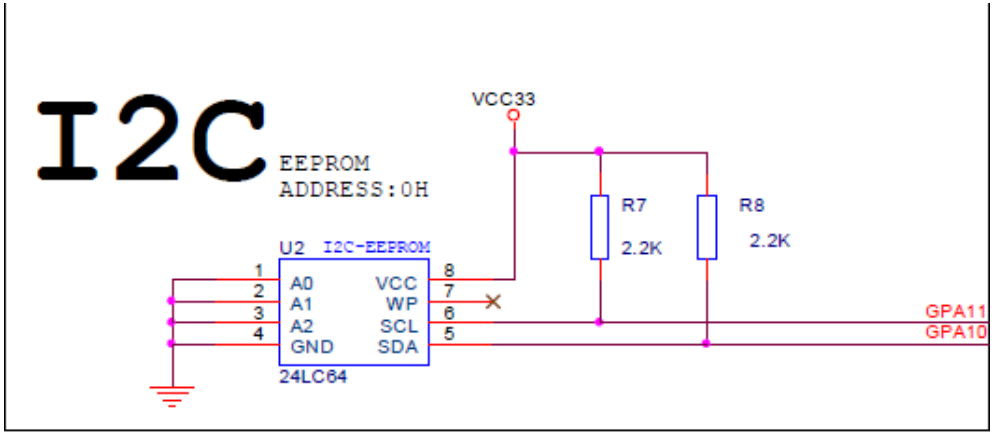

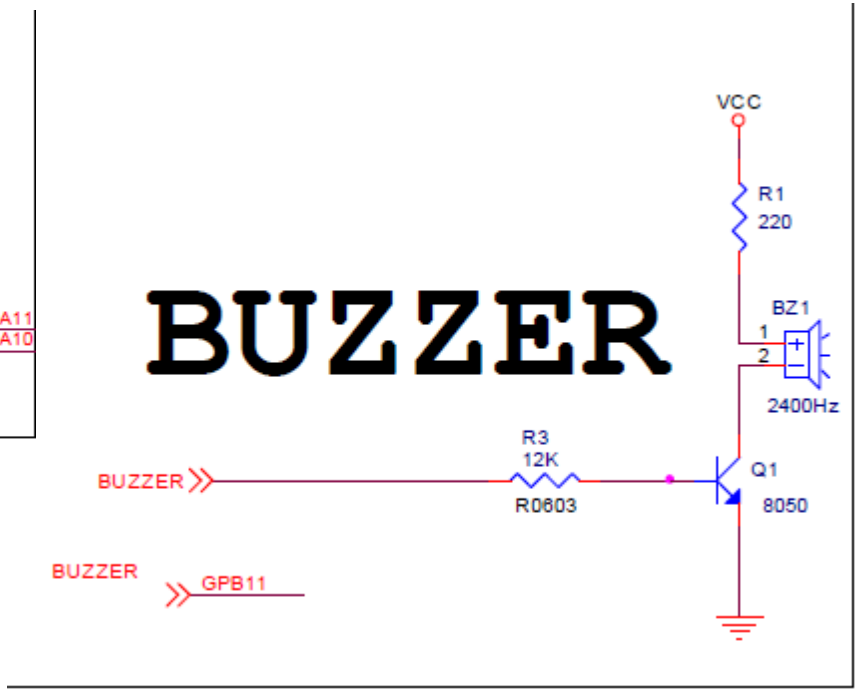

SPI 線路圖

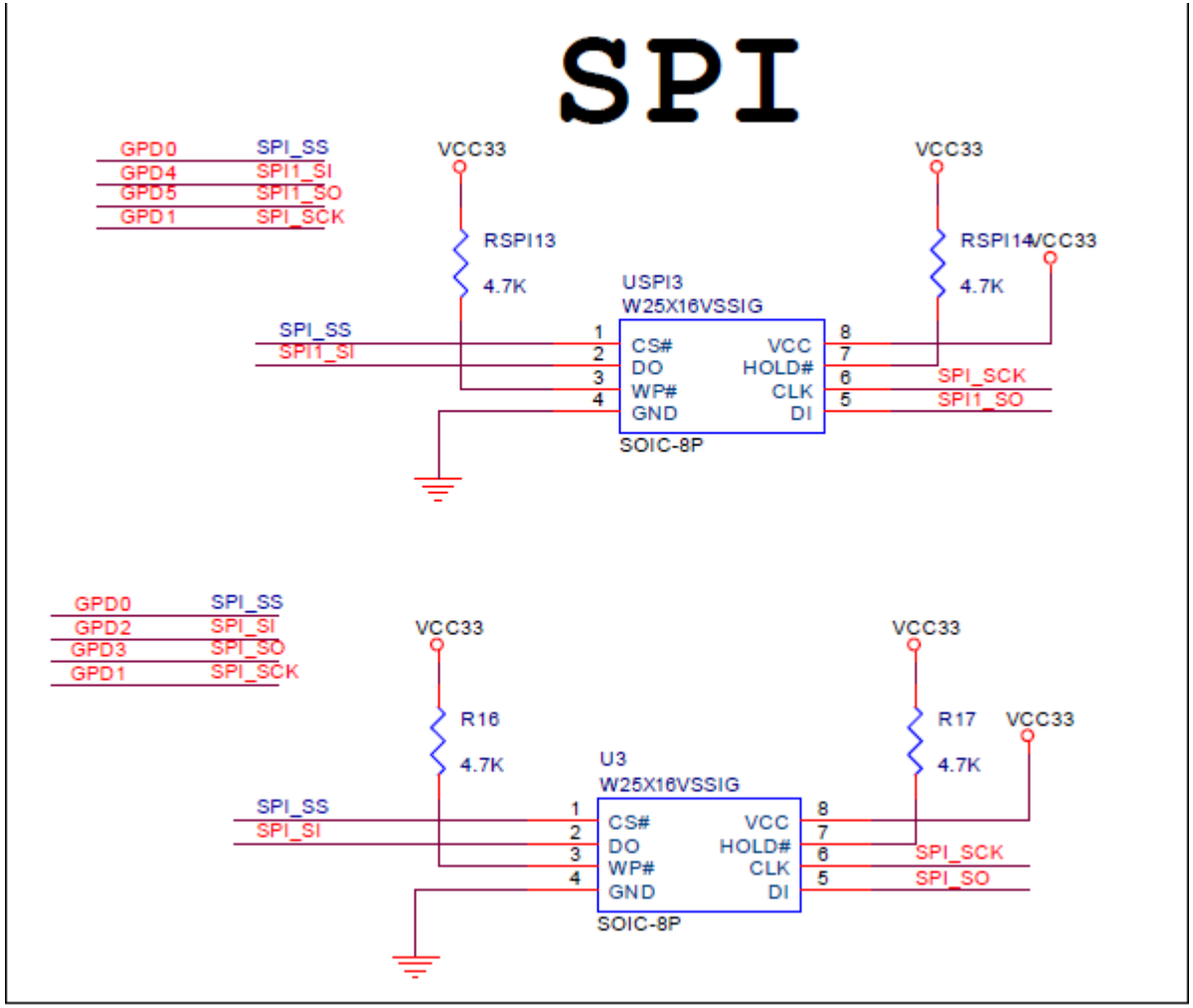
SPI
GPD0
GPD4
GPD5
GPD1
SPI_SS
SPI1_SI
SPI1_SO
SPI_SCK
VCC33
RSPI13
4.7K
USPI3
W25X16VSSIG
CS#
DO
WP#
GND
VCC
HOLD#
CLK
DI
SOIC-8P
RSPI14/CC33
SPI_SS
SPI1_SI
SPI_SCK
SPI1_SO
GPD0
GPD2
GPD3
GPD1
SPI_SS
SPI_SI
SPI_SO
SPI_SCK
R16
R17
U3
W25X16VSSIG
SPI_SS
SPI_SI
SPI_SCK
SPI_SO

PS2 & ADC 線路圖

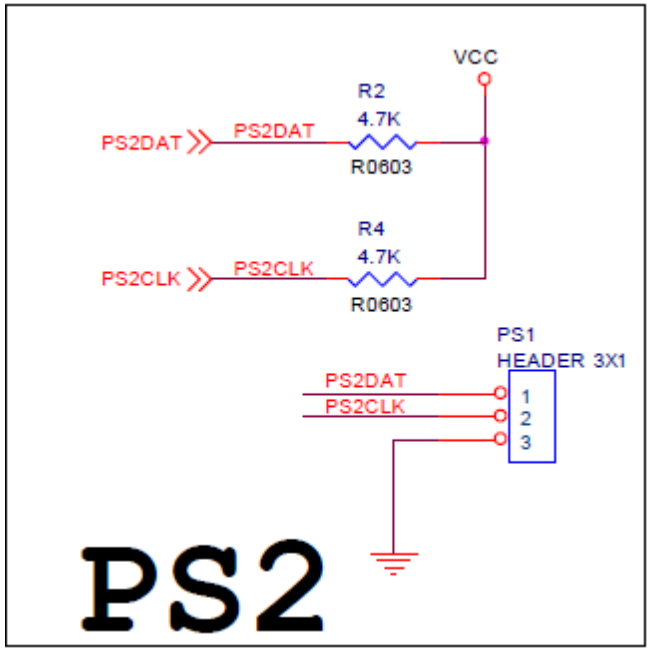
VCC
R2
4.7K
R0603
PS2DAT
PS2DAT
R4
4.7K
R0603
PS2CLK
PS2CLK
PS1
HEADER 3X1
PS2DAT
PS2CLK
1
2
3
PS2

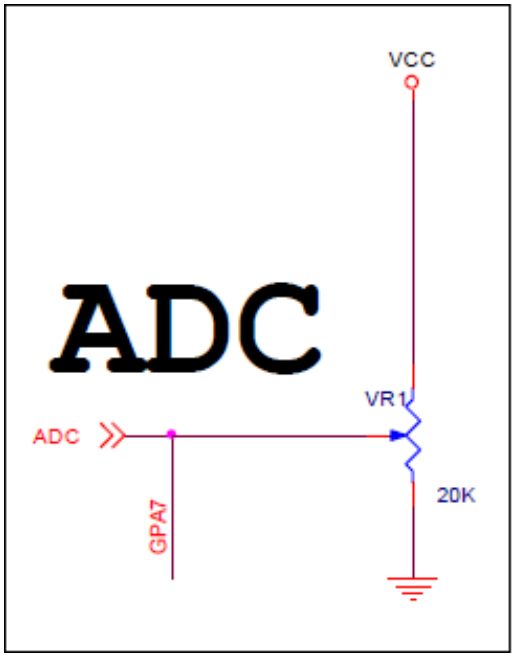
VCC
ADC
VR1
ADC
20K
GPA7

I2S 線路圖

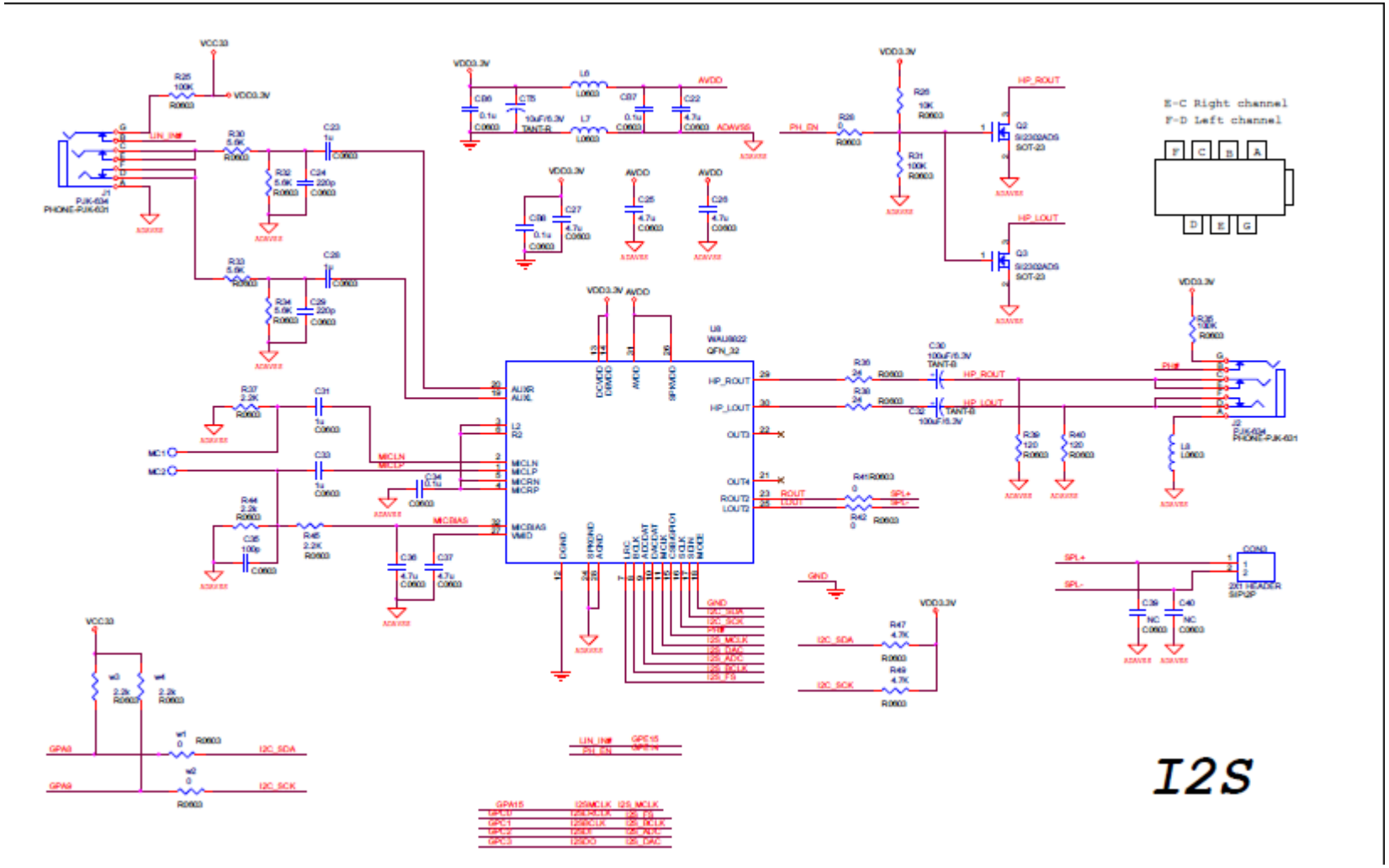

CAN＆LIN線路圖

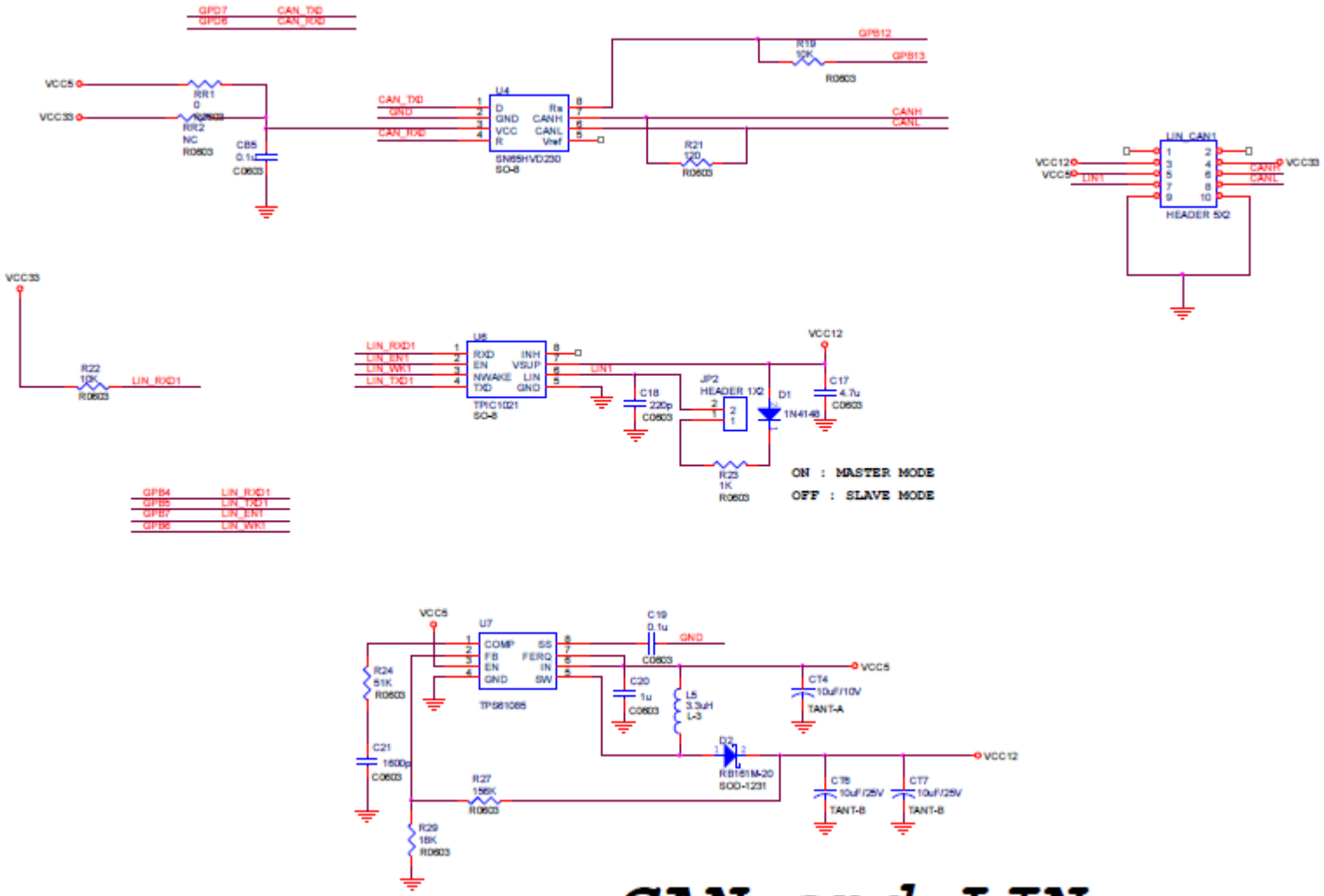

CAN and LIN

SD card 介面線路圖

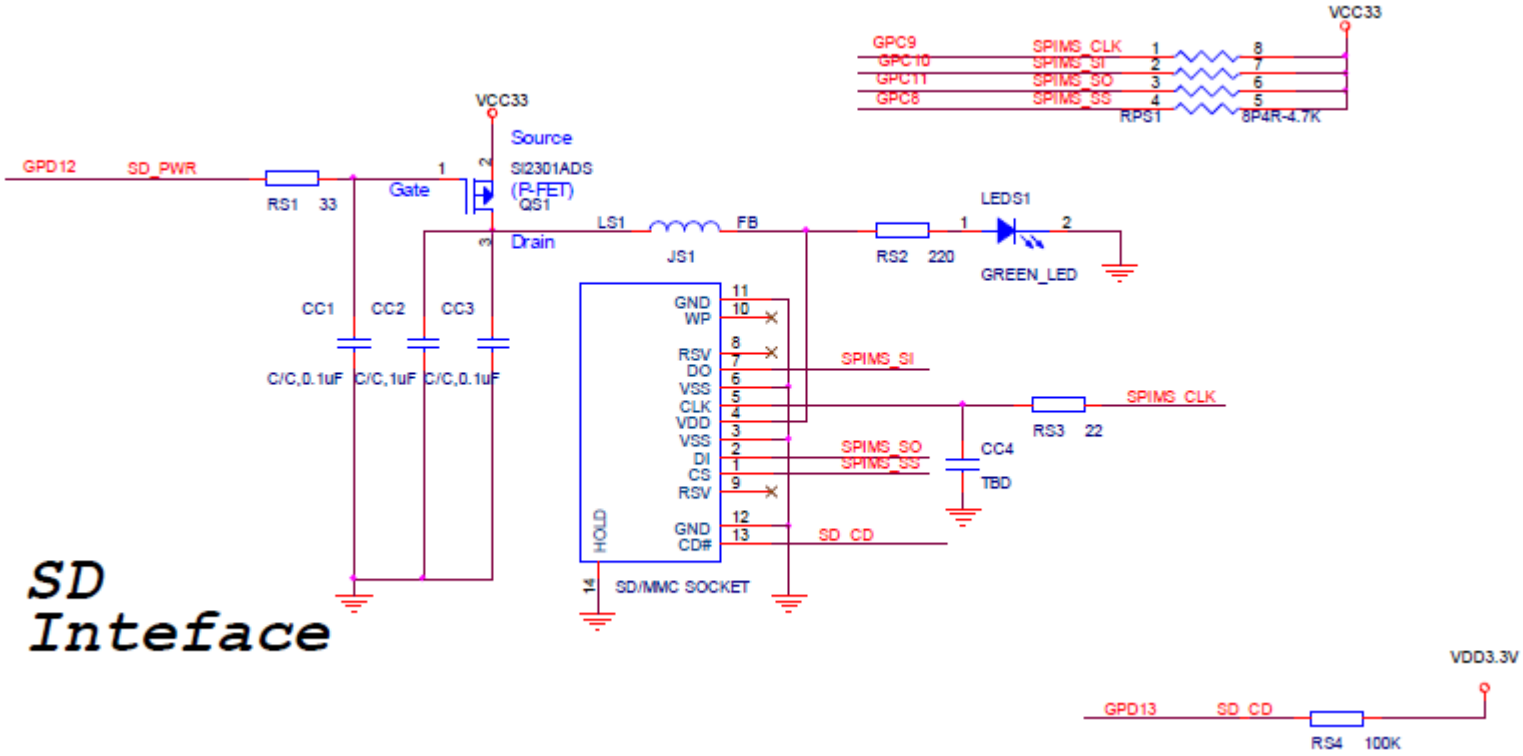

學習板之GPIO腳位表列

- NuMicro Cortex-M0學習板具有五個GPIO群:
  GPIOA, GPIOB, GPIOC, GPIOD, GPIOE
- 在程式範例中定義組群名為GPA,GPB,GPC,GPD,GPE
- GPIO位於學習板下方排針處: J4, J5, J6, J7, J8
- 一般安裝雙排針來使用，可由此排針連接所使用之GPIO腳位至外部電路

GPIO group A,B

JP4: GPIOA			
GPA	Define		
1	GPIOAO	ADCO	
2	GPIOA1	ADC1	
3	GPIOA2	ADC2	
4	GPIOA3	ADC3	
5	GPIOA4	ADC4	
6	GPIOA5	ADC5	
7	GPIOA6	ADC6	
8	GPIOA7	ADC7	SPI_SS21
9	GPIOA8	I2COSDA	
10	GPIOA9	I2COSCL	
11	GPIOA10	I2C1SDA	
12	GPIOA11	I2C1SCL	
13	GPIOA12	PWMO	
14	GPIOA13	PWM1	
15	GPIOA14	PWM2	
16	GPIOA15	PWM3	
17-18	GND		

JP5 : GPIOB			
GPAB	**DEFINE**		
1	GPIOBO	RX0	
2	GPIOB1	TX0	
3	GPIOB2	RTS0	
4	GPIOB3	CTS0	
5	GPIOB4	RX1	
6	GPIOB5	Tx1	
7	GPIOB6	RTS1	
8	GPIOB7	CTS1	
9	GPIOB8	TM0	STADC
10	GPIOB9	TM1	SPI SS11
11	GPIOB10	TM2	SPI SS01
12	GPIOB11	TM3	
13	GPIOB12	CPOO	
14	GPIOB13	CP01	
15	GPIOB14	INT0	SPI SS31
16	GPIOB15	INT1	
17-18	GND		

GPIO group C, D ,E

JP6 : GPIOC		
GPCD	DEFINE	
1	GPIOCO	SPI_SS00
2	GPIOC1	SPICLK0
3	GPIOC2	SDI00
4	GPIOC3	SDO00
5	GPIOC4	SDI01
6	GPIOC5	SD001
7	GPIOC6	CPP0
8	GPIOC7	CPN0
9	GPIOC8	SPI_SS10
10	GPIOC9	SPICLK1
11	GPIOC10	SDI10
12	GPIOC11	SDO10
13	GPIOC12	SDI11
14	GPIOC13	SDO11
15	GPIOC14	CPP1
16	GPIOC15	CPN1
17-18	GND	

JP7 : GPIOD		
GPCD	DEFINE	
1	GPIODO	SPI SS20
2	GPIOD1	SPICLK2
3	GPIOD2	SDI20
4	GPIOD3	SD020
5	GPIOD4	SDI21
6	GPIOD5	SD021
7	GPIOD6	CAN0 RX
8	GPIOD7	CAN0 TX
9	GPIOD8	SPI_SS30
10	GPIOD9	SPICLK3
11	GPIOD10	SDI30
12	GPIOD11	SDO30
13	GPIOD12	SDI31
14	GPIOD13	SDO31
15	GPIOD14	CAN1_RX
16	GPIOD15	CAN1_TX
17-18	GND	

JP8 : GPIOE	
GPE	DEFINE
1	GPIOE0
2	GPIOE1
3	GPIOE2
4	GPIOE3
5	GPIOE4
6	GPIOE5
7	GPIOE6
8	GPIOE7
9	GPIOE8
10	GPIOE9
11	GPIOE10
12	GPIOE11
13	GPIOE12
14	GPIOE13
15	GPIOE14
16	GPIOE15
17-18	GND

學習板之範例程式 (LB002)

NUC100SeriesBSP\NuvotonPlatform_Keil\Sample\NUC1xx-LB_002\

- **Smpl_ADC_PWM** → ADC輸入控制PWM輸出頻率
- **Smpl_Capture** : PMW 輸出(GPA13,14), 捕捉輸入(GPA12)
- **Smpl_FATFS_SDCard** : 建立FAT 檔案系統與讀取SDCard
- **Smpl_FMC** : 重置按鈕 boot in AP (ICP 模式), 軟體中斷按鈕 boot in LDROM (ISP 模式)
  Smpl_HID_IO : PC執行人機界面應用程式來控制學習板上的 LEDs
- **Smpl_I2C_24LC64** : 1~9按鍵控制 I2C 讀寫 (U2) 24LC64 8KB EEPROM
- **Smpl_Interrupt** : 按下軟體中斷可由中斷程式控制LED閃爍
- **Smpl_LIN_Master** : LIN通訊埠之主傳輸端 (通到僕傳輸端)
- **Smpl_LIN_Slave** : LIN通訊埠之僕傳輸端(通到主傳輸端)
- **Smpl_SPI_Flash_PDMA** : 透過SPI 讀取快閃記憶 W25Q16 (16MB)
- **Smpl_SPI_Flashx2** : 透過SPI 之雙線模式讀取快閃記憶 W25Q16 16MB
- **Smpl_Start_Kit** : 初學範例程式，可顯示訊息至LCD、七段顯示器
- **Smpl_Timer_WDT_RTC** : RTC 顯示年月日時分秒於LCD, 計數器及看門狗之使用
- **Smpl_UAC** : PC播放MP3通過USB傳到再學習板的耳機孔輸出
- **Simpl_UDC** : USB讀卡機，透過USB讀取SD卡
- **Smpl_VCOM** : 虛擬串列通訊埠，在PC的USB上虛擬出一個串列埠

範例: Smpl_ADC_PWM

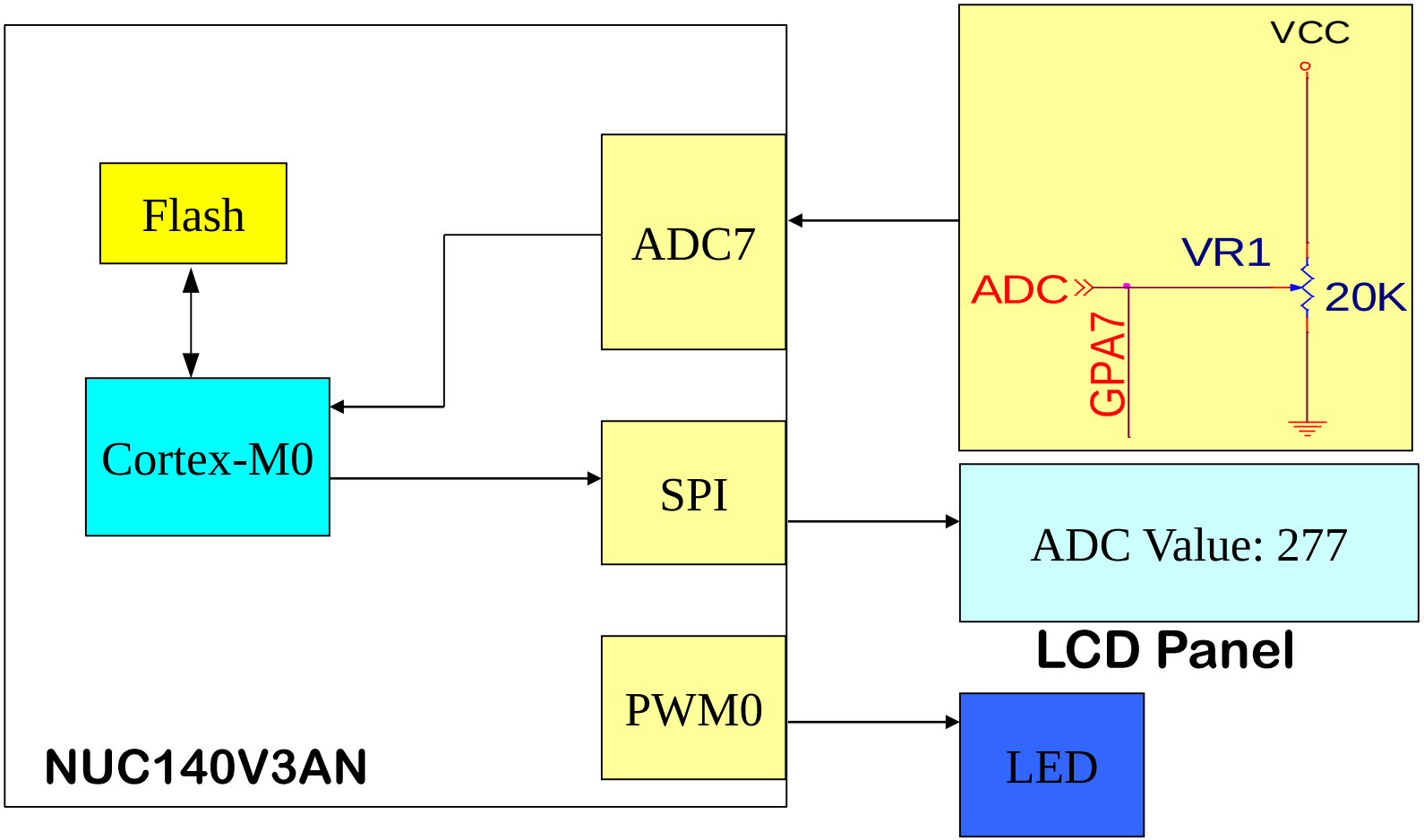

功能: 由可調電組 VR1 改變PWM頻率及控制 LED 閃爍

範例: Smpl_Capture

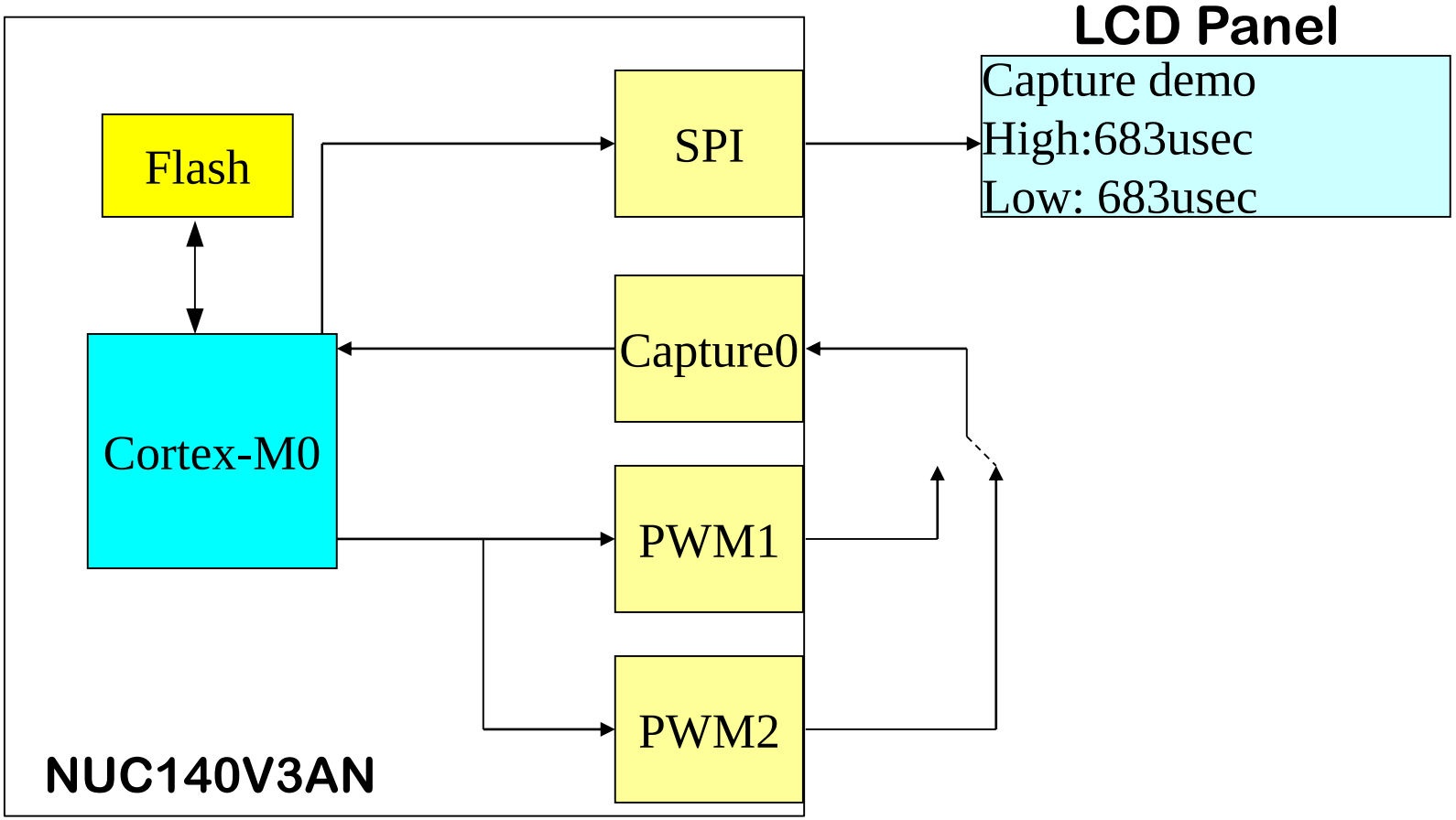

功能：PWM輸出與捕捉輸入

Smpl_Capture

- Capture0
  - Input Channel:GPA12
  - Counter unit: 1usec (((11+1)*1)/12M)
  - Capture capability: 32 bits (hardware 16bits+ firmware 16bits)
- PWM1
  - Output Channel:GPA13
  - Period: 1.049 sec (((11+1)*16*(65535+1))/12M)
  - High level: 262msec, Low level: 786msec
- PWM2
  - Output Channel:GPA14
  - Period: 1365.3 usec (((1+1)*1*(8191+1))/12M)
  - High level: 682usec, Low level: 682usec
- LCD
  - Display Capture0 result

範例: Smpl_FMC

- MCU boot in APROM
- LED rotates left
- Press SW_INT to ISP function and Boot from LD
- MCU boot in LDROM
- MCU reset, after MCU boot in LDROM
- LED rotates right and flash

功能: 重置按鈕 boot in AP (ICP 模式), 軟體中斷按鈕 boot in LDROM (ISP 模式)

範例: Smpl_I2C_24LC64

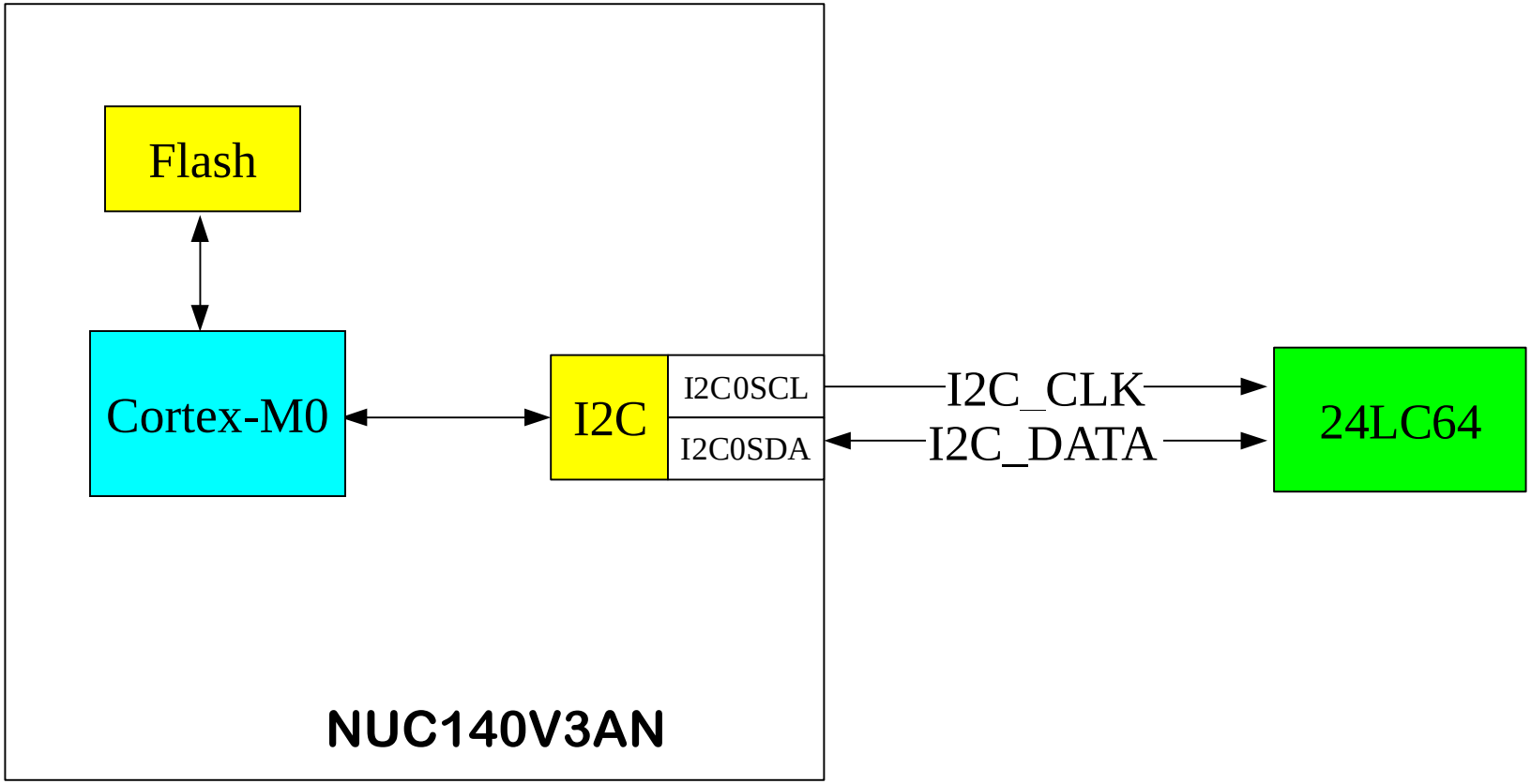

功能：透過I2C 界面讀寫 EEPROM

範例: Smpl_SPI_Flash_PDMA

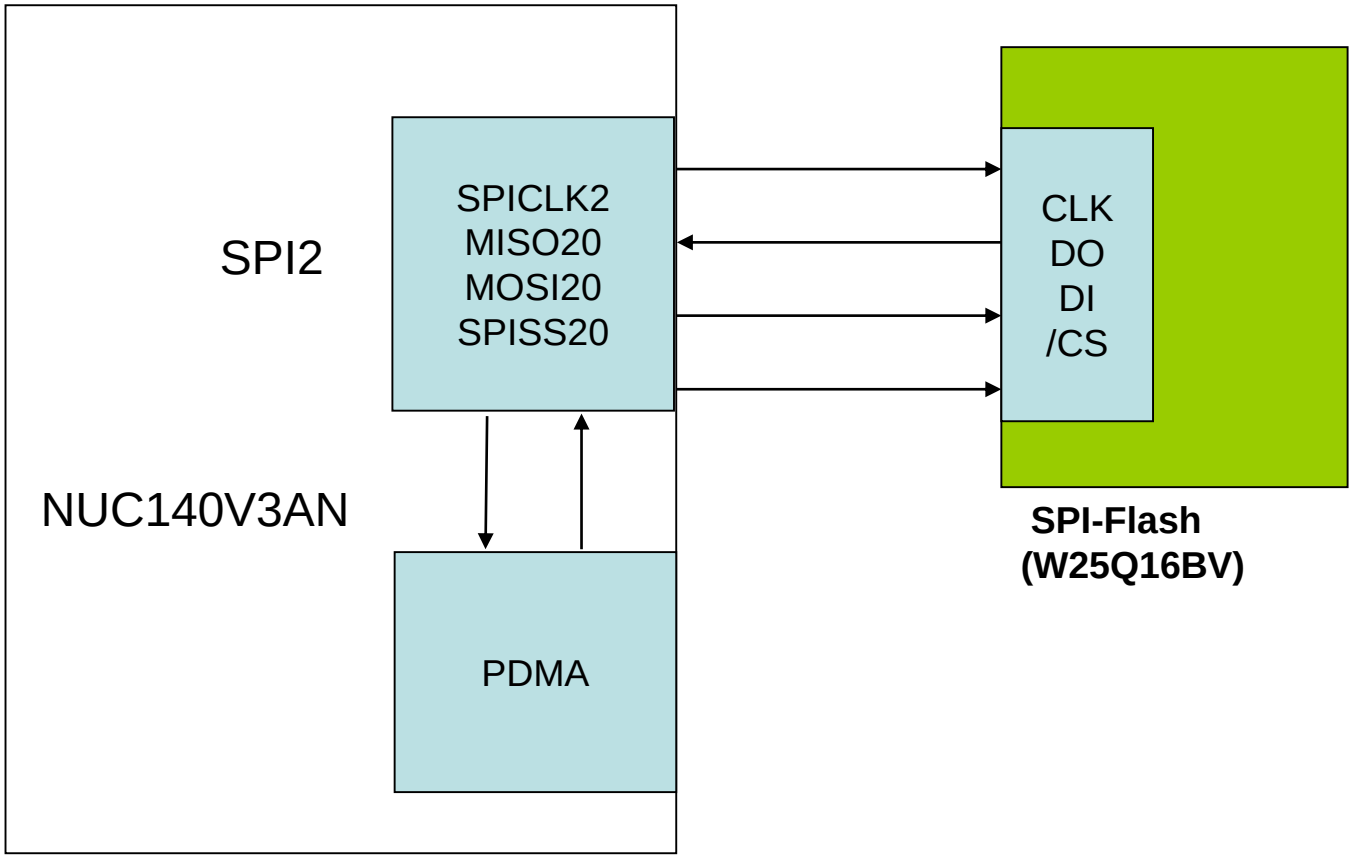

功能：透過SPI 界面讀寫快閃記憶 W25Q16 (16MB)

Smpl_SPI_Flash_PDMA

- Master mode
- One channel data in/out
- SPI clock rate 1MHz
- Transmit data at negative edge
- Receive data at positive edge
- Disable the auto slave select
- Slave select is active low
- SPICLK2(GPD1) <--> SPI-Flash0_CLK (pin 6)
- MISO20(GPD2) <--> SPI-Flash0_DO (pin 2)
- MOSI20(GPD3) <--> SPI-Flash0_DI (pin 5)
- SPISS20(GPD0) <--> SPI-Flash0_/CS (pin 1)

Smpl_SPI_Flashx2

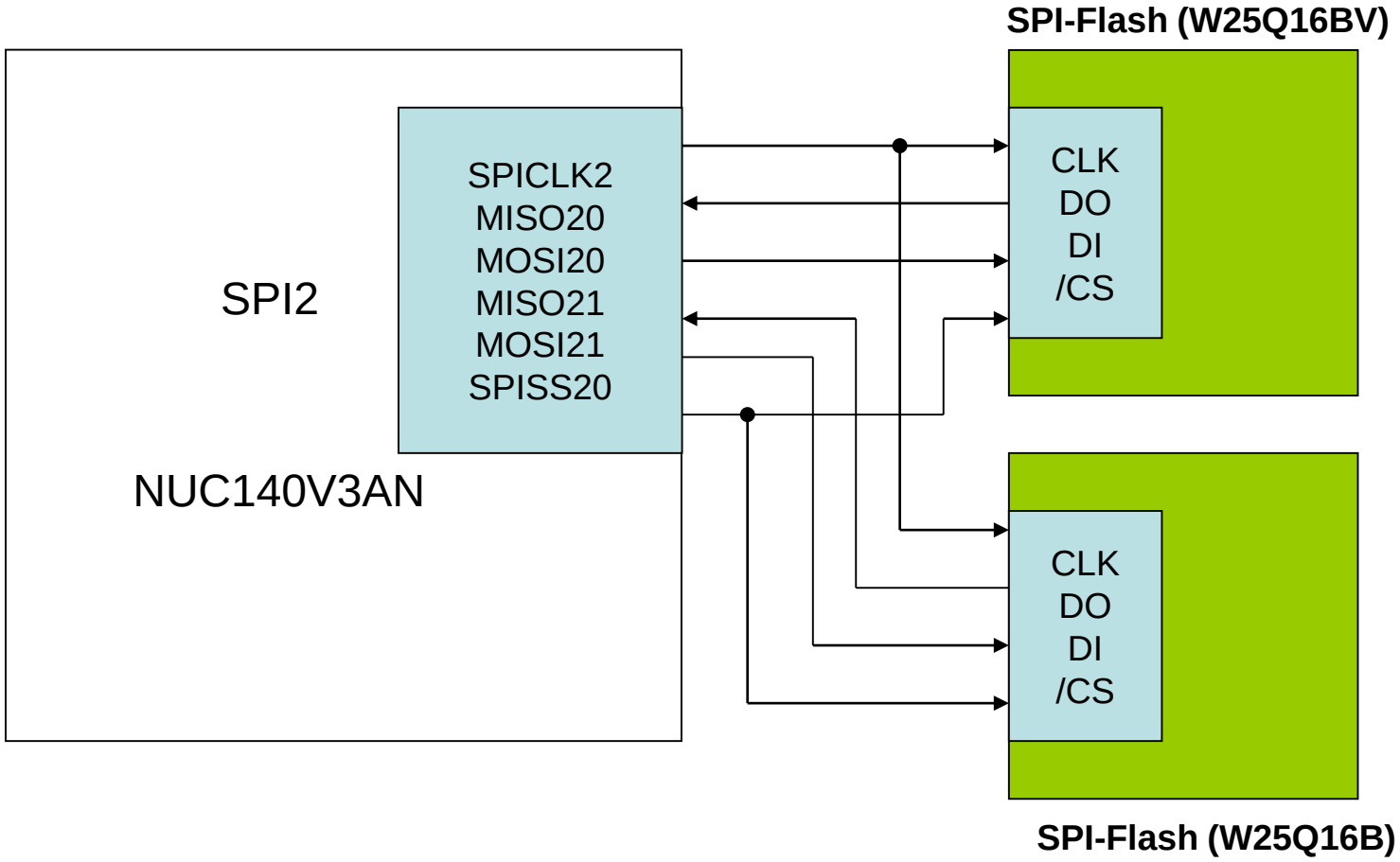

功能：透過SPI 界面之雙位元模式讀寫快閃記憶 W25Q16 (16MB)

Smpl_UAC

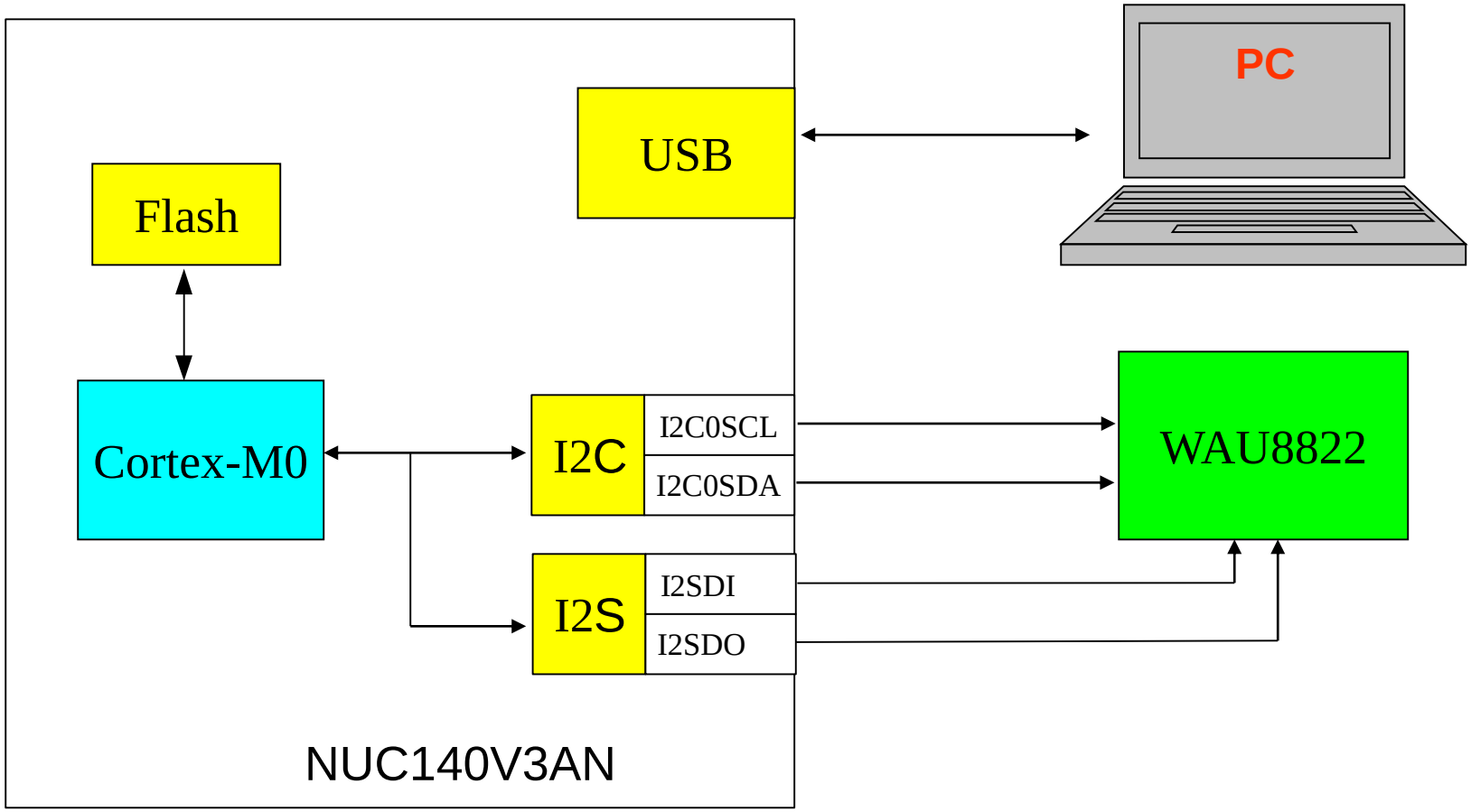

功能：MP3播放器，PC透過USB傳輸音頻資料
由NUC140透過I2S界面傳送到WAU8822，然後輸出到喇叭或耳機

Smpl_UDC

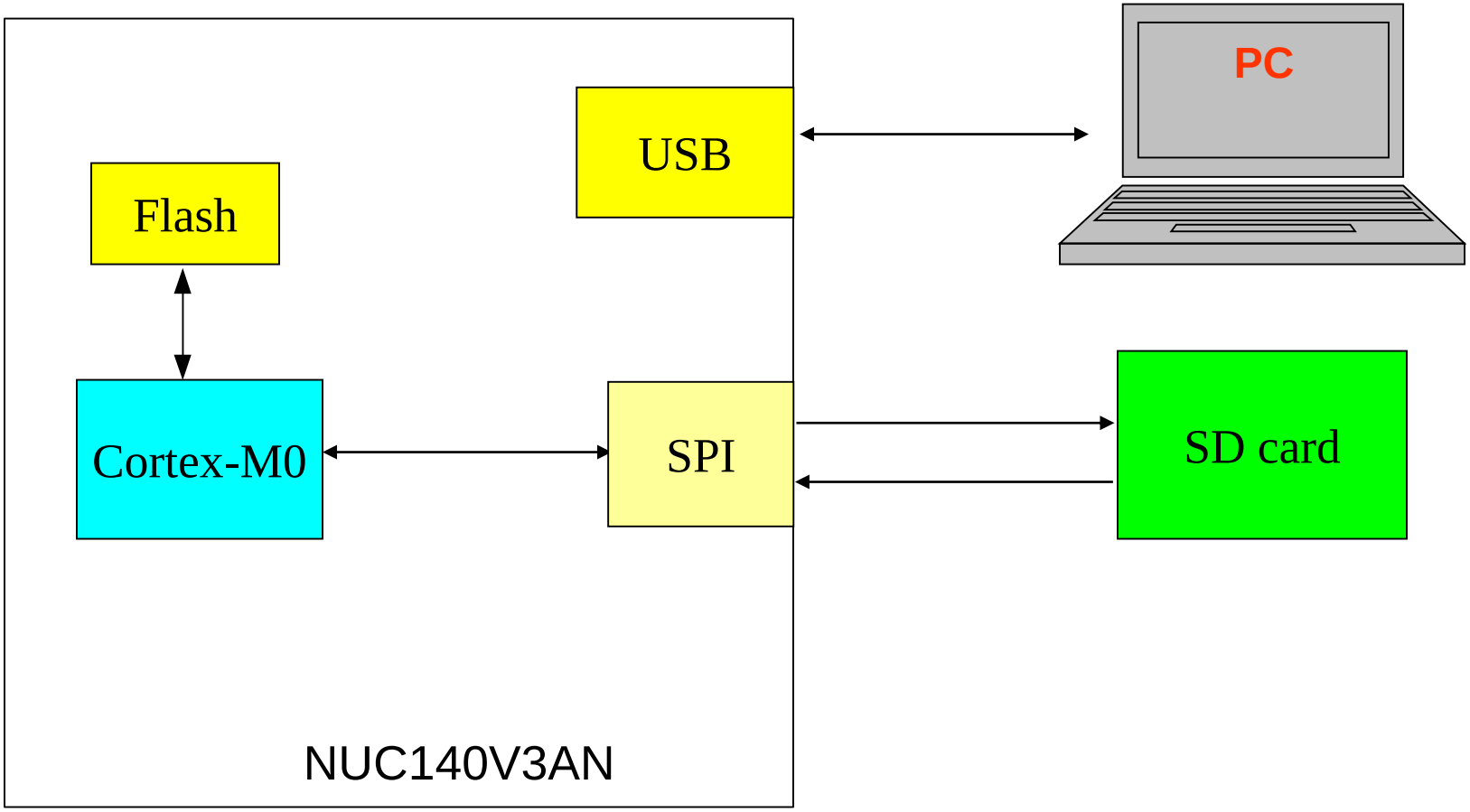

功能：USB讀卡機，透過USB讀取SD卡

NuMicro 產品開發流程

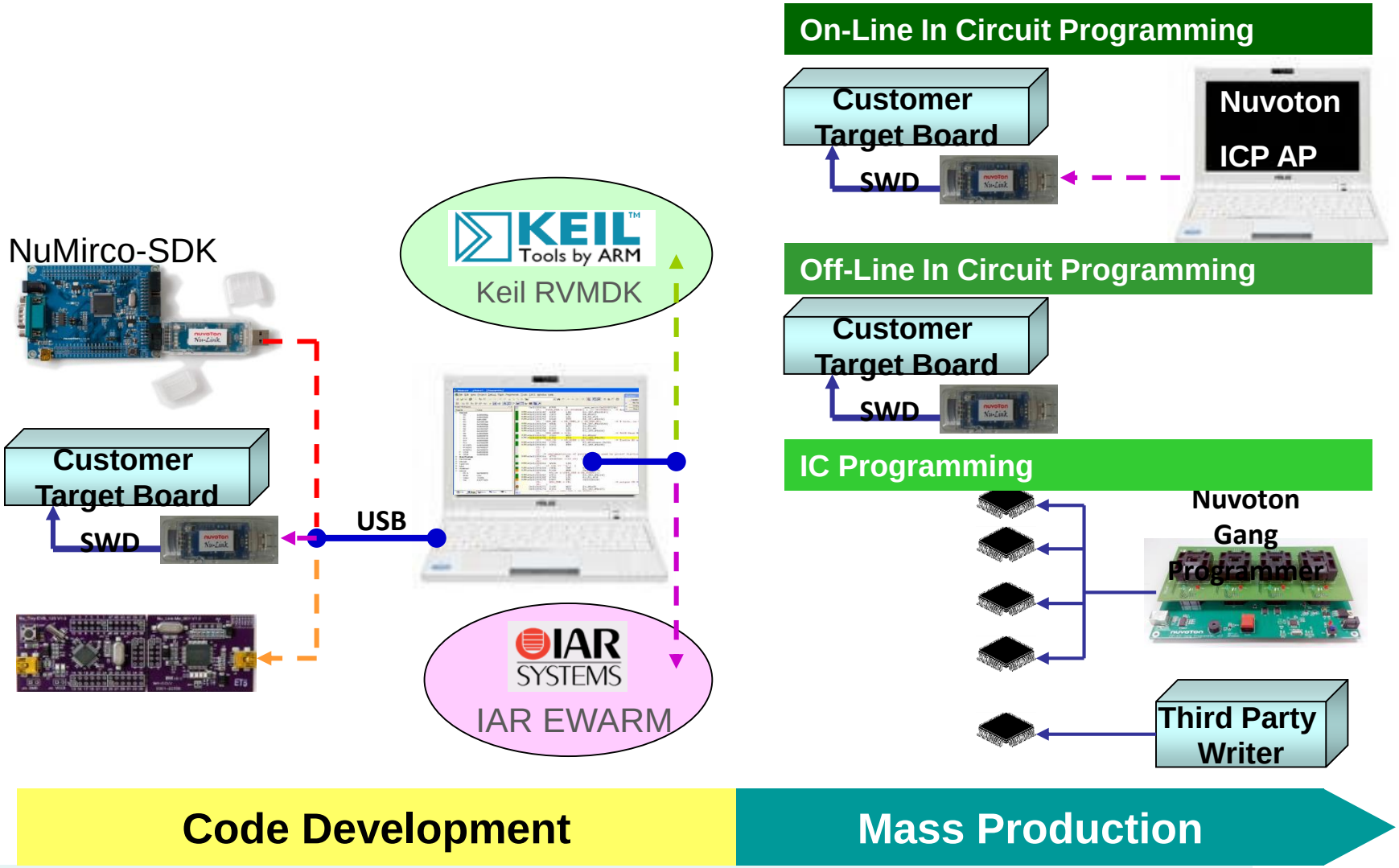

Cortex-M0學習板之簡介（正面）－1/6

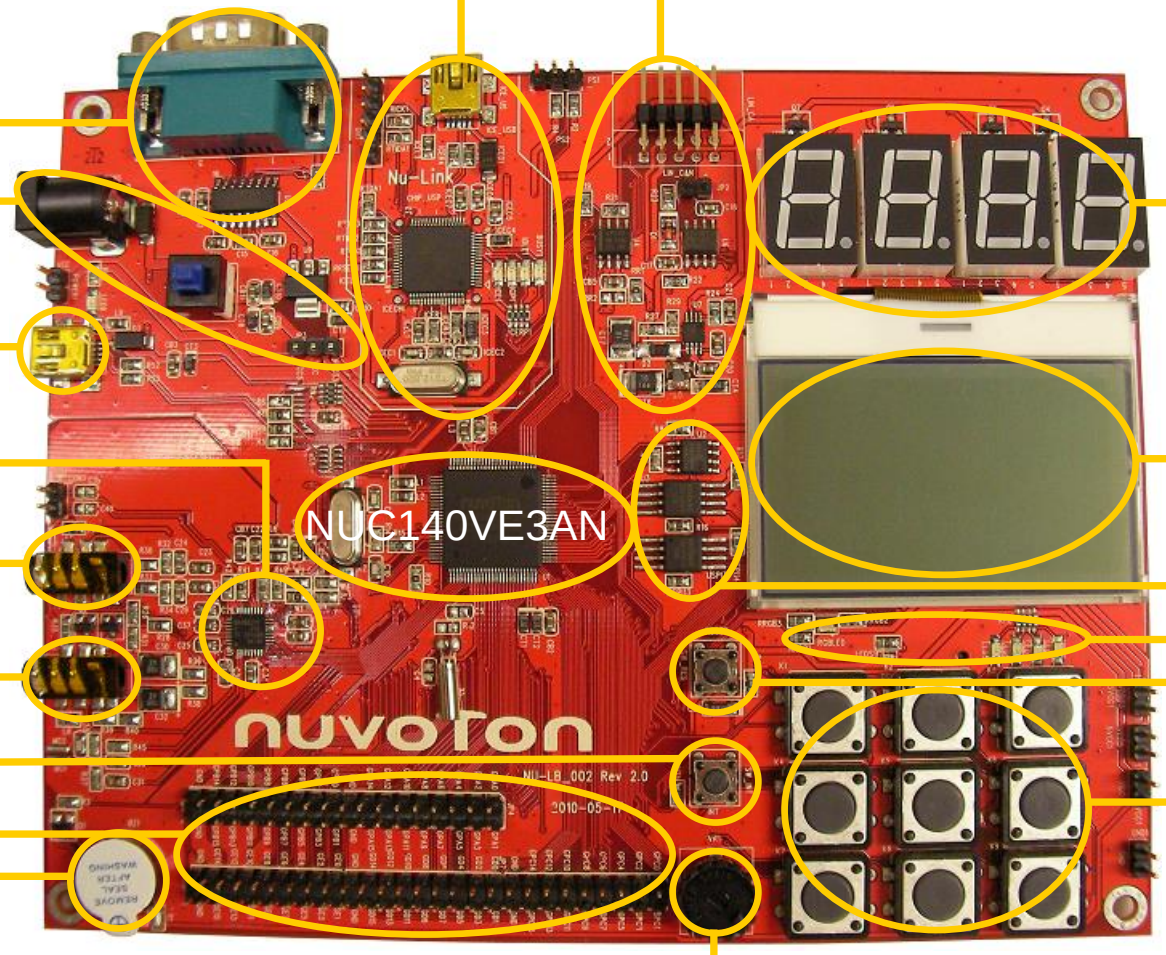

Cortex-M0學習板之簡介（背面)- 2/6

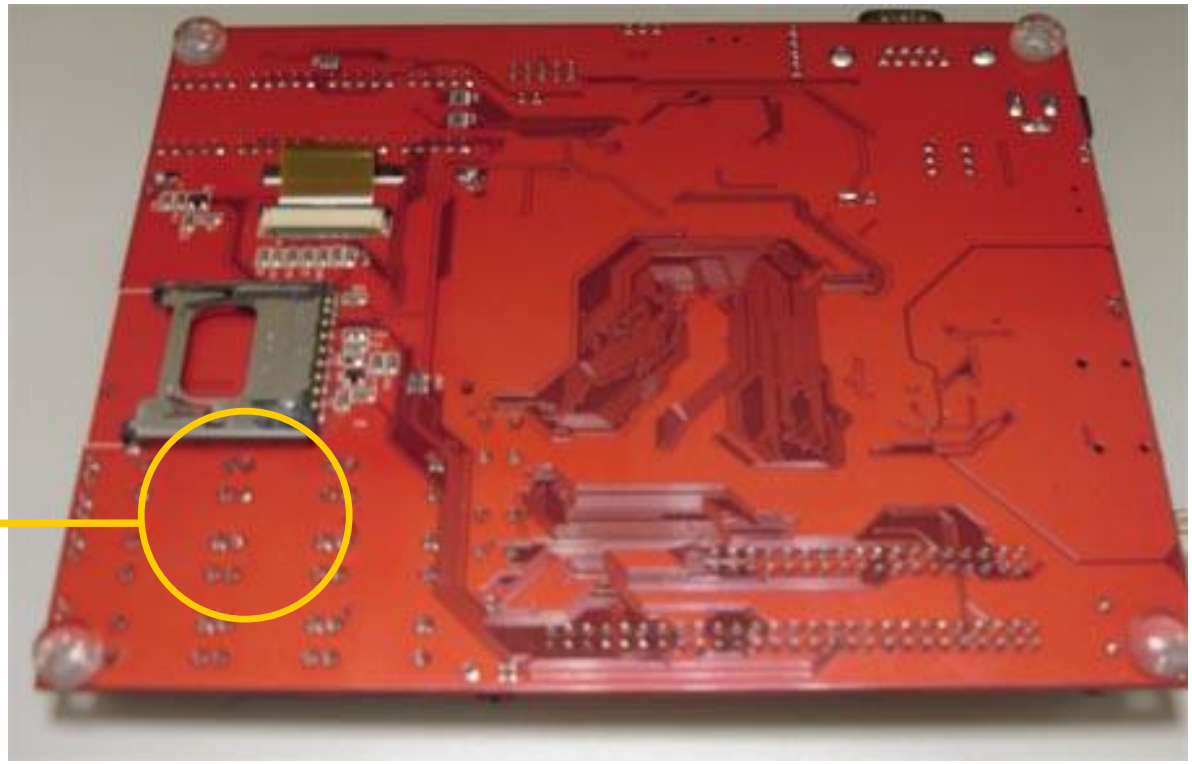

Cortex-M0學習板之簡介 – 3/6

Block	Pin	Function
ICE Bridge Nu-Link	ICE_CLK ICE_DATA	SWD interface
UART	GPB0 GPB1	UART0 Rx UART0 Tx
WAU8822 codec	GPC0 GPC1 GPC2 GPC3 GPA15	I2SLRCLK I2SBCLK I2SDI I2SDO I2SMCLK
	GPA8 GPA9	I2C0 SDA I2C0 SCL
	GPE14	Line out Enable/Disable
	GPE15	Line in plug in/out detect
Key GPB15	GPB15	INT1

Cortex-M0學習板之簡介 – 4/6

Block	Pin	Function
CAN	GPD6 GPD7	CAN0 Rx CAN0 Tx
	GPB12~13	CAN transceiver speed
LIN	GPB4 GPB5	UART1 Rx UART1 Tx
	GPB6	LIN transceiver wakeup function
	GPB7	LIN transceiver Enable/Disable
7-Seg LED	GPE0~7	Row
	GPC4~7	Column
Black Dot Matrix LCD Panel	GPD8 GPD9 GPD10 GPD11`	SPI3 SS30 SPI3 SPCLK LCD Reset SPI3 MOSI0
	GPD14	Background Enable/Disable

Cortex-M0學習板之簡介 – 5/6

Block	Pin	Function
Variable Resistance	GPA7	ADC interface
Buzzer	GPB11	PWM4
Key Matrix	GPA0~5	GPIO
Reset	RESET	Reset
EEPROM	GPA10 GPA11	I2C1 SDA I2C1 SCL
FLASH	GPD0 GPD1 GPD2 GPD3 GPD4 GPD5	SPI2 SS20 SPI2 SPCLK SPI2 MISO0 SPI2 MOSI0 SPI2 MISO1 SPI2 MOSI1

Cortex-M0學習板之簡介 – 6/6

Block	Pin	Function
LED	GPA12 GPA13 GPA14	PWM0 PWM1 PWM2
	GPC12~15	GPIO
SD card	GPD12 GPD13	SD card Power Enable/Disable SD card insert detection
	GPC8 GPC9 GPC10 GPC11	SPI1 SS10 SPI1 SPCLK SPI1 MOSI0 SPI1 MISO0

由NuLink連接至 PC

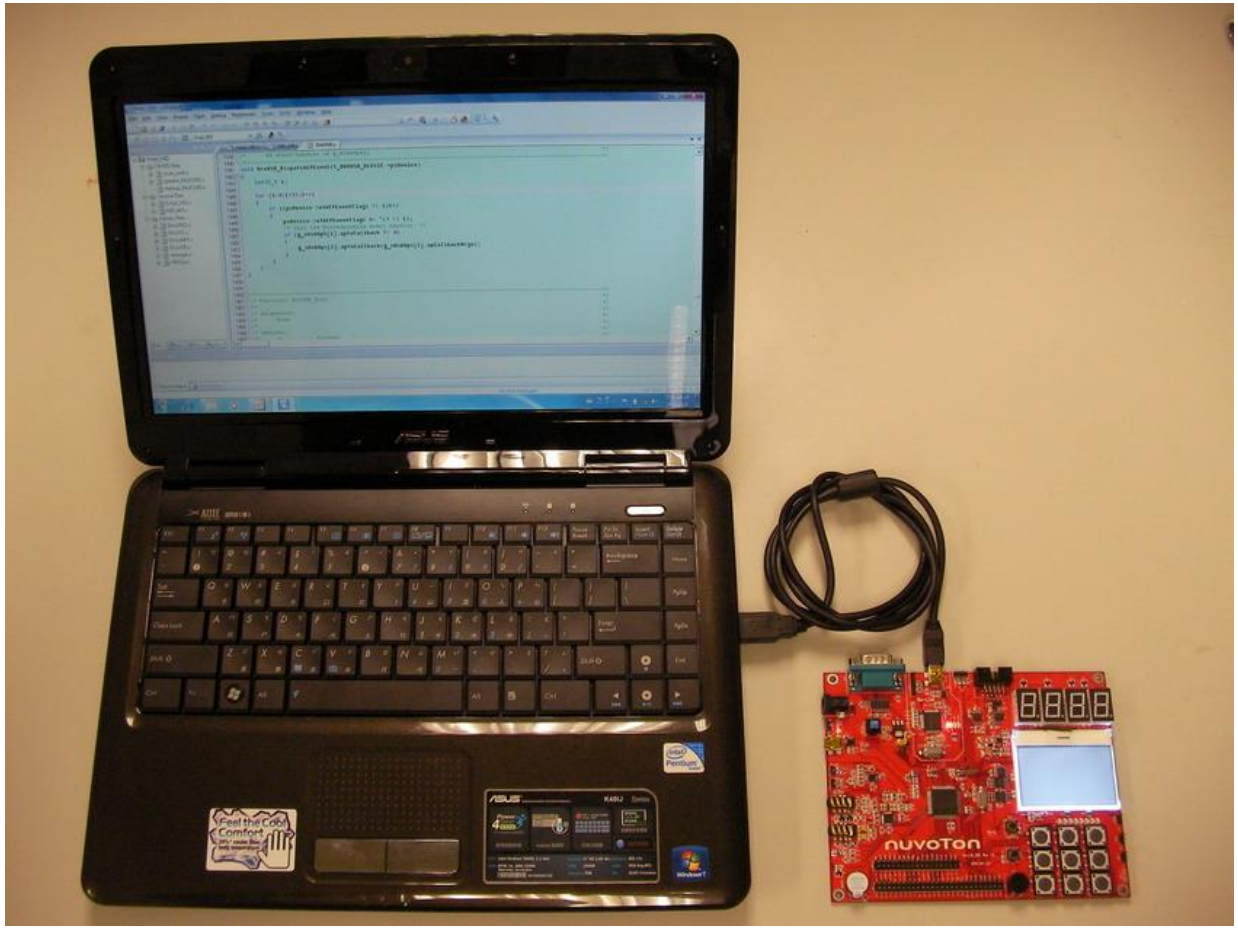

NuLink 已內建在學習板上（RS232接頭右側之電路）

軟體開發環境之安裝與使用

- 將NuMicro Cortex-M0 學習板連接至PC前，需要安裝以下項目
  - **Keil 軟體開發環境** (提供程式編輯、編譯、除錯等功能)
  - **NuLink 驅動程式**(透過USB驅動學習板上之NuLink電路)
  - **Nuvoton BSP** (學習板週邊驅動程式與範例程式)

- 軟體安裝完畢，由PC接上學習板上方NuLink之mini USB展開使用
  - 可將編譯完成之程式二進碼，透過NuLink燒錄至NUC140單晶片中
  - 然後，按下重置按鍵令NUC140單晶片從頭執行新的程式碼
  - 或者，拔開USB接頭再插上，亦可達成學習板之重新開機，從頭執行新的程式碼

新唐科技之NuMicro SDK CDROM免費提供學習板所需之軟體
www.nuvoton.com 亦可免費下載最新版之驅動程式與範例程式

軟體安裝 (附DVD/CD-ROM)

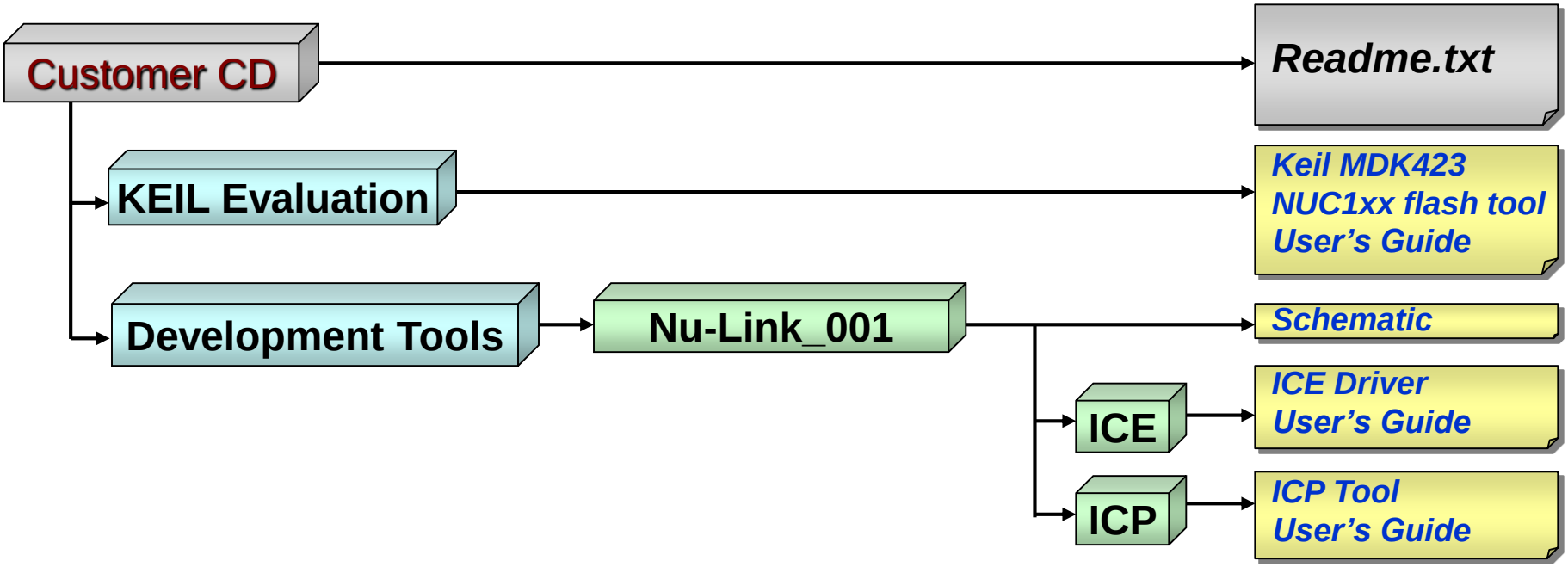

1. Keil MDK : mdk423.exe

2. Nu-Link Driver : DocumentsInfo_Nu-Link_Keil_Driver_v1.18.5320.zip

3. Nuvoton BSP : DocumentsInfo_NUC100SeriesBSP_v1.05.002.zip

軟體開發環境之安裝步驟

- mdk470a.exe (2013/2/18)
  - ARM/Keil提供的免費軟體開發環境，含程式編譯與除錯等。
  - *可於Keil官網下載免費最新版本*
- Nu-Link_Driver_for_Keil_RVMDK_V1.20.5881.zip (2012/12/19)
  - 新唐提供的ICE驅動程式 (NuLink為學習板上內建之燒錄除錯器)
  - *於Keil MDK環境安裝後，再安裝此NuLink驅動程式!*
- NUC100SeriesBSP_v1.05.003.zip (2012/3/26)
  - 新唐提供的學習板函式庫與範例程式
  - *解壓縮後即可使用!*
  - *NuMicro NUC100 Series Driver Reference Guide V1.05.001*
- 有兩種**安裝方式**: 手動安裝三個檔案，或用SDK光碟選學習板自動安裝

手動安裝：下載最新版本KEIL MDK-ARM

1. 下載MDK-ARM

Download Products

Select a product from the list below to download the latest version.

MDK-ARM
Version 4.72a (July 2013)
Development environment for Cortex and ARM devices.

2. 填寫資料

ARM Software
Microcontroller Development Kit
Version 4.72a
Complete the following form to download the Keil software development tools.

Enter Your Contact Information Below

First Name:
Last Name:
E-mail:
Company:
Address:
City:
State/Province: Select Your State or Province
Zip/Postal Code:
Country: Select Your Country
Phone:

3. 下載檔案

MDK472_A.EXE (571,320K)
Friday, July 05, 2013

- 下載網址：https://www.keil.com/download/product/

手動安裝1.：安裝Keil uVision4

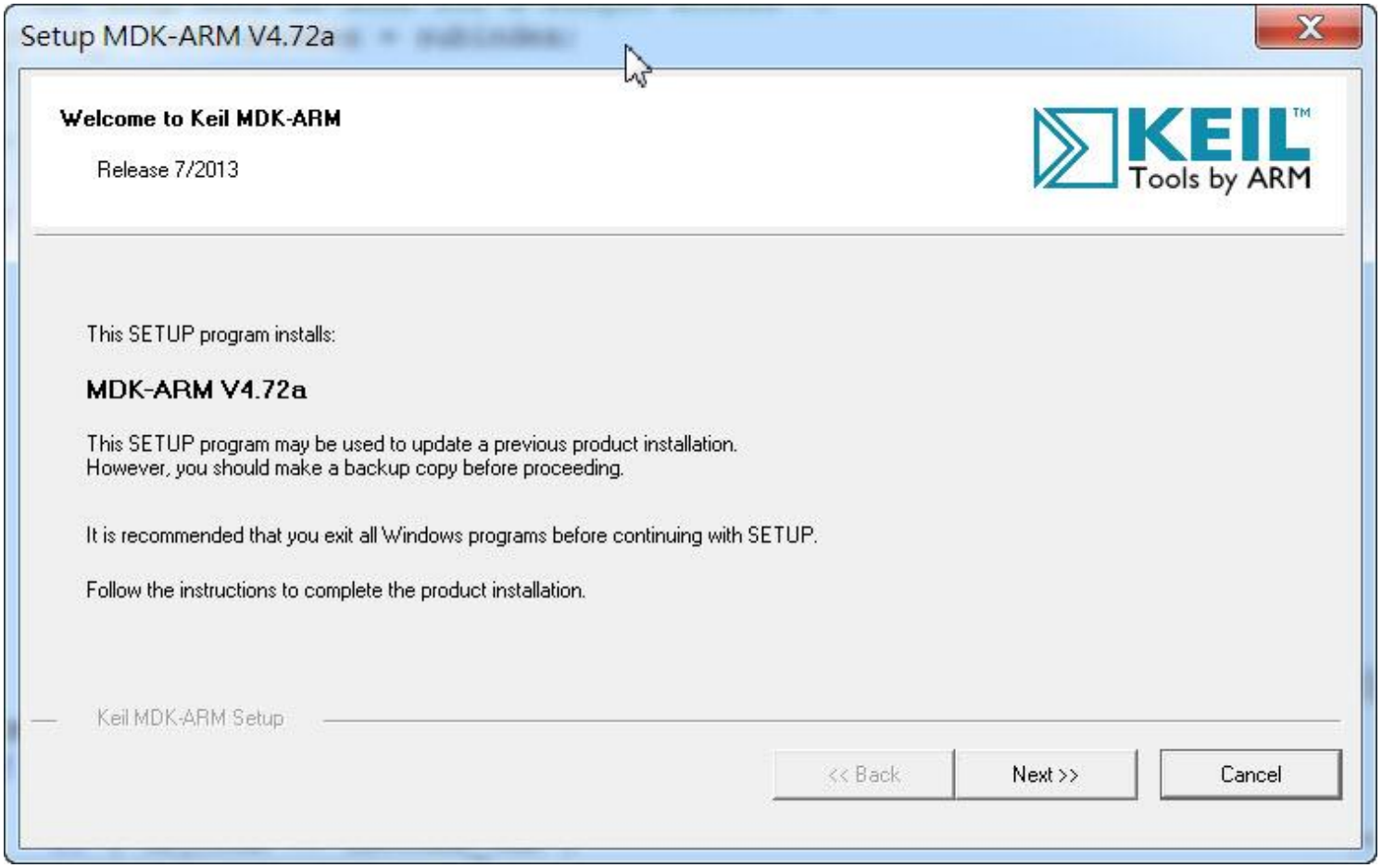

免費版本支援程式碼大小為32KB

手動安裝2.：安裝 NuLink ICE 驅動程式

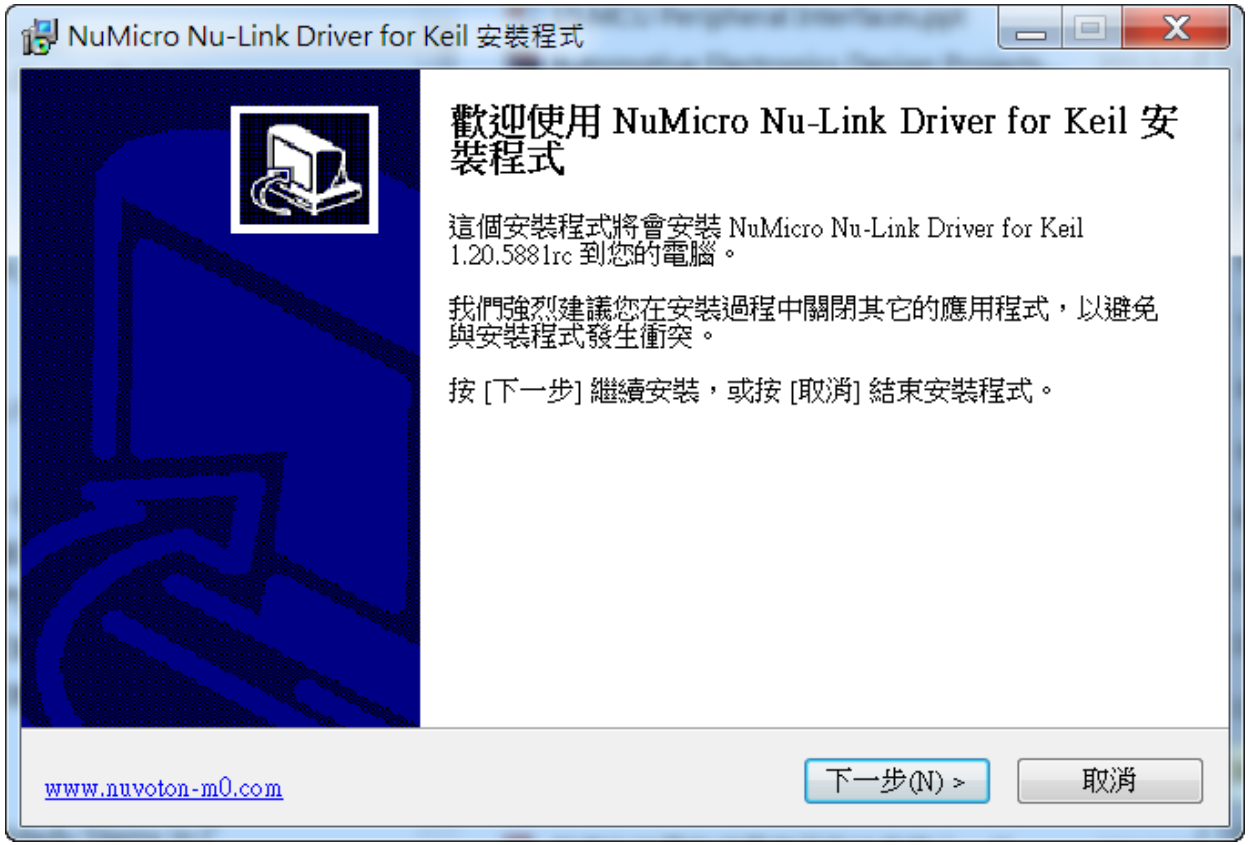

安裝Nu-Link_Keil_Driver 1.20.5881.exe

Nu-Link ICE 驅動程式最新版本可至www.nuvoton.com網頁下載

Nu-Link Driver for Keil RVMDK V1.20.5881.zip

手動安裝3.：安裝新唐驅動程式與範例

- 解壓縮NUC100SeriesBSP_v1.05.003.zip，放於 D:\nuvoton\
- 如果解壓縮的路徑不是D:\nuvoton\，若造成編譯的錯誤，必須修改include paths的設定，
- 初學者在未弄清楚有關路徑的設定，不要擅自修改，造成編譯的錯誤。

Nuvoton BSP最新版本可至 Nuvoton 網頁下載

NUC100Series BSP_CMSIS V1.05.003.zip

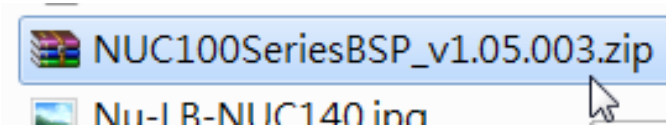

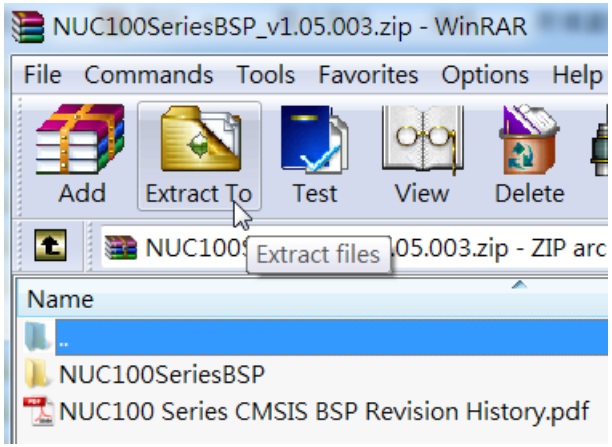

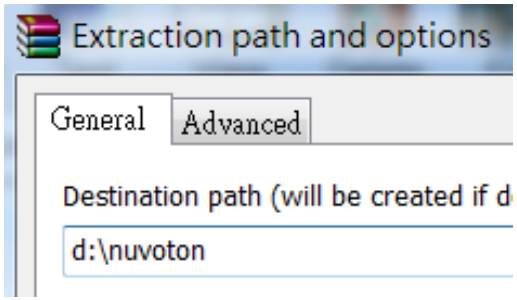

光碟安裝：SDK 光碟之自動安裝

學習板

光碟安裝： Learning Board Quick Start

選學習板

光碟安裝： LB Quick Start

選學習板

光碟安裝： Nu-LB-NUC140

按步驟安裝軟體:
1. 開發環境
2. 驅動程式
3. 函式庫、範例程式

計畫開發之步驟:

- 首先安裝開發環境
- 進行計畫開發，循以下步驟
  - 找程式範例路徑
  - 連接PC

範例程式之目錄路徑

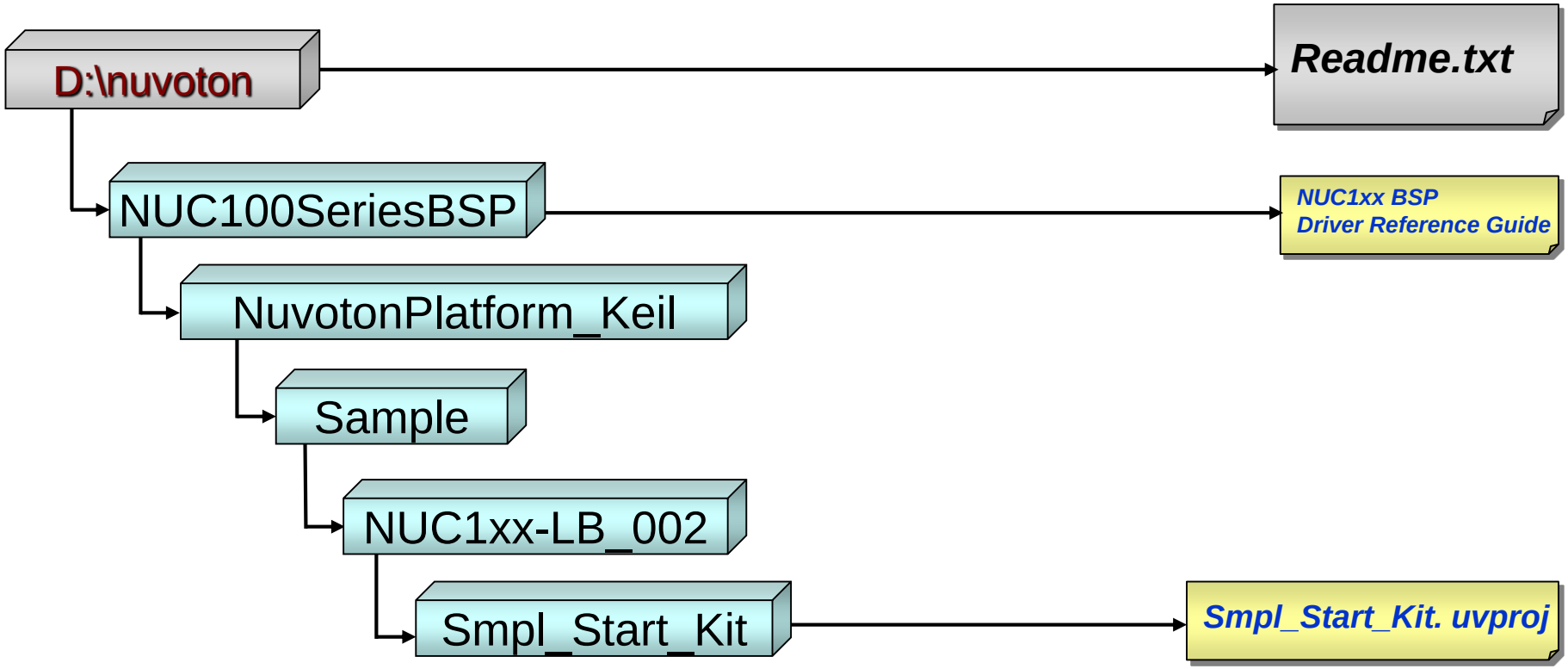

Smpl_Start_Kit : 初學者範例程式

[註]先解壓縮檔NUC100SeriesBSP_v1.05.003.zip到c:\nuvoton

Step 1. 連接NU-LB-NUC140學習板

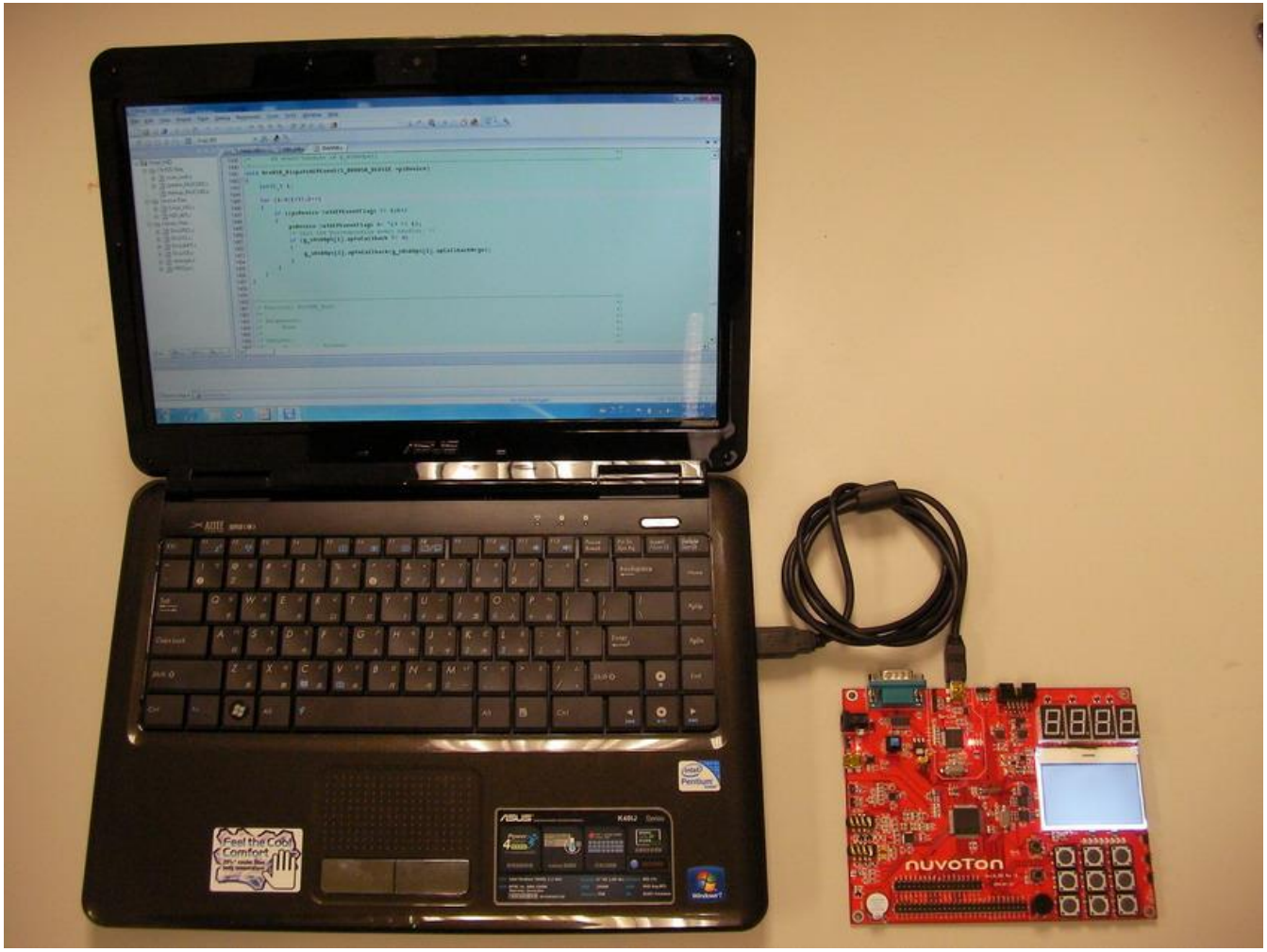

Step 2. 開啟uVision4的project

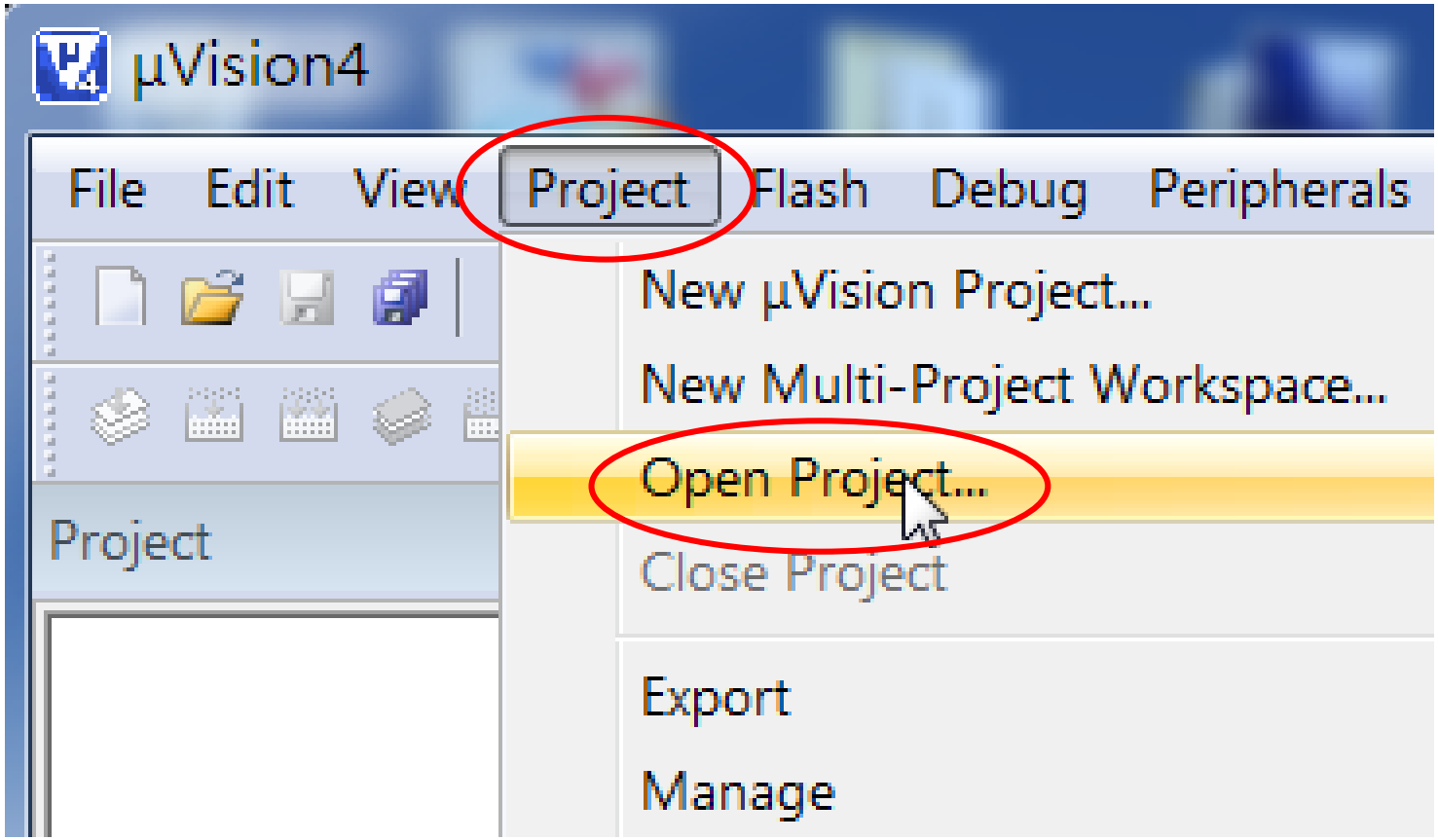

Step 3. 選取計畫 “Smpl_Start_Kit”

選取目錄
D:\nuvoton\NUC100SeriesBSP\NuvotonPlatform_Keil\Sample\NUC1xx-LB_002\Smpl_Start_Kit
選取檔案Smpl_Start_Kit.uvproj

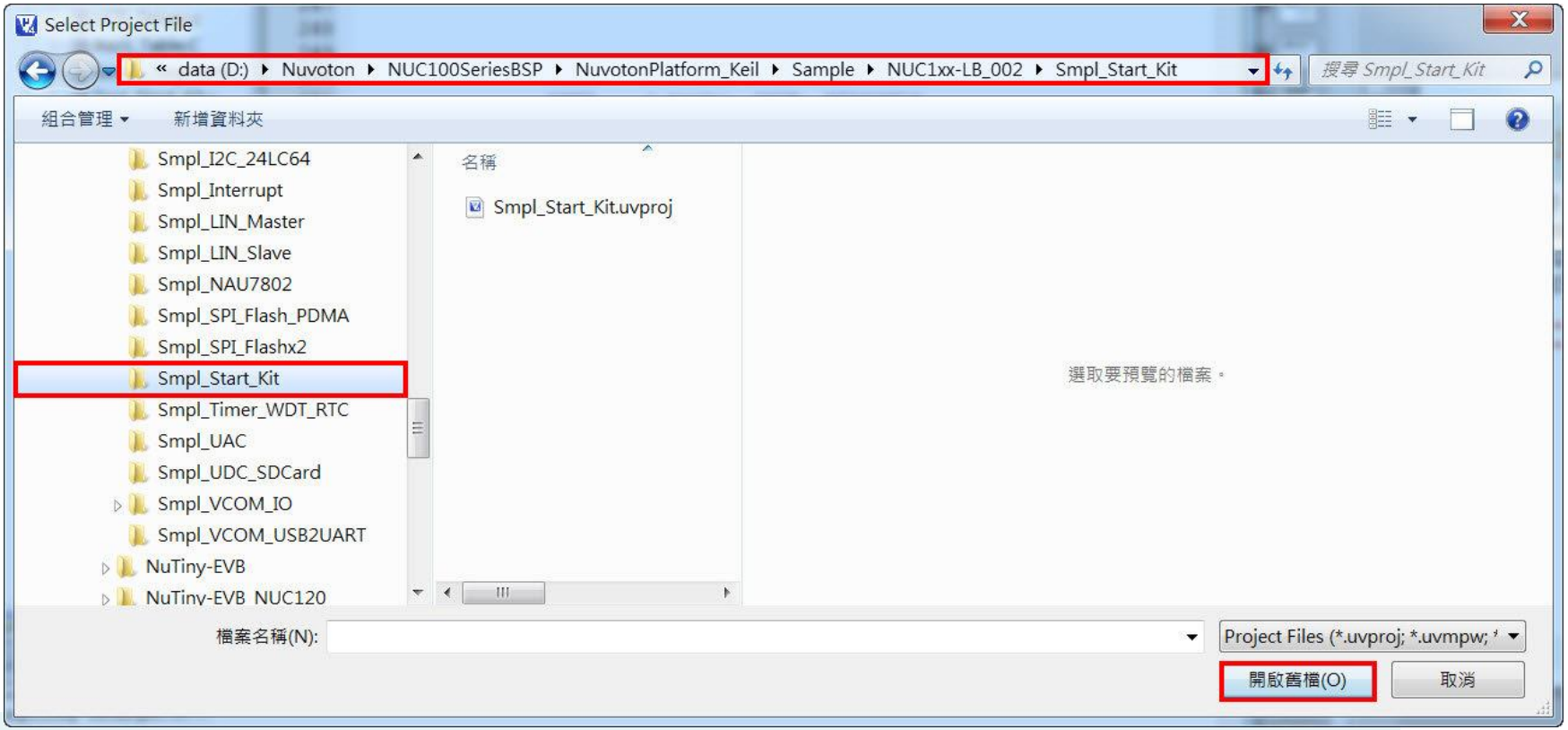

設定Target的選項

- 指到Smpl_Start_Kit
- 按右鍵
- 點選Options for Target ‘Smpl_Start_Kit’

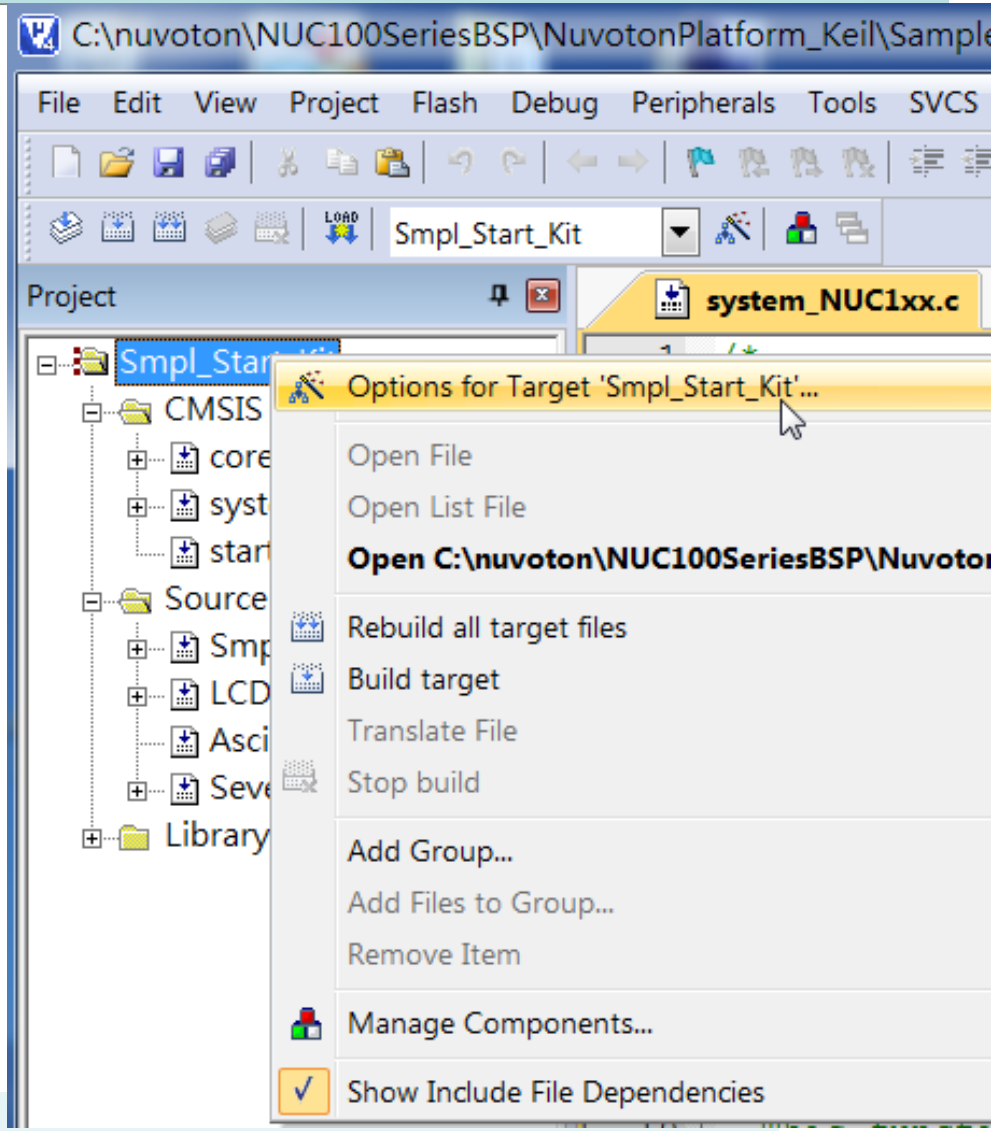

設定[Target]：震盪器時脈

- 輸入震盪器時脈

Options for Target 'Smpl_Start_Kit'

Device | Target | Output | Listing | User | C/C++ | Asm | Linker | Debug | Utilities

Nuvoton NUC140VE3AN

Xtal (MHz): 12.0

Operating system: None

System-Viewer File (.Sfr):

Code Generation

- [ ] Use Cross-Module Optimization
- [ ] Use MicroLIB
- [ ] Big Endian

Read/Only Memory Areas

default	off-chip	Start	Size	Startup
[ ]	ROM1:			○
[ ]	ROM2:			○
[ ]	ROM3:			○
	on-chip			
[x]	IROM1:	0x0	0x20000	○
[ ]	IROM2:			○

Read/Write Memory Areas

default	off-chip	Start	Size	NoInit
[ ]	RAM1:			[ ]
[ ]	RAM2:			[ ]
[ ]	RAM3:			[ ]
	on-chip			
[x]	IRAM1:	0x20000000	0x4000	[ ]
[ ]	IRAM2:			[ ]

OK | Cancel | Defaults | Help

設定[Device]：處理器的廠牌，型號

- 點選[Device]，Database:NuMicro Cortex M0 Database
- Vendor:Nuvoton，Device:NCU140VE3CN

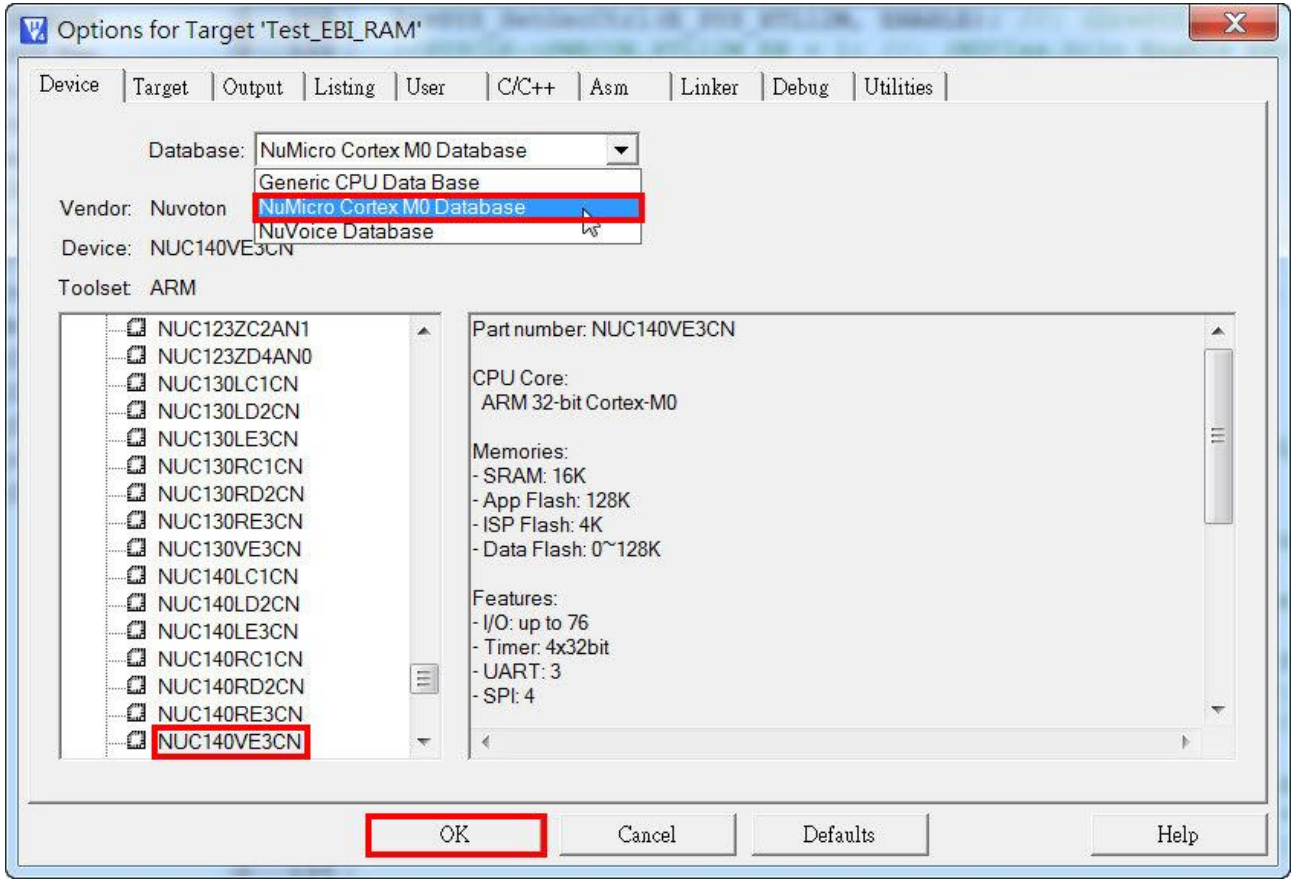

設定[Listing]：

- 不要勾選[Listing]的C Compiler Listing: .\lst*.txt，在KEIL試用版編譯時會造成—asm –interleave的錯誤

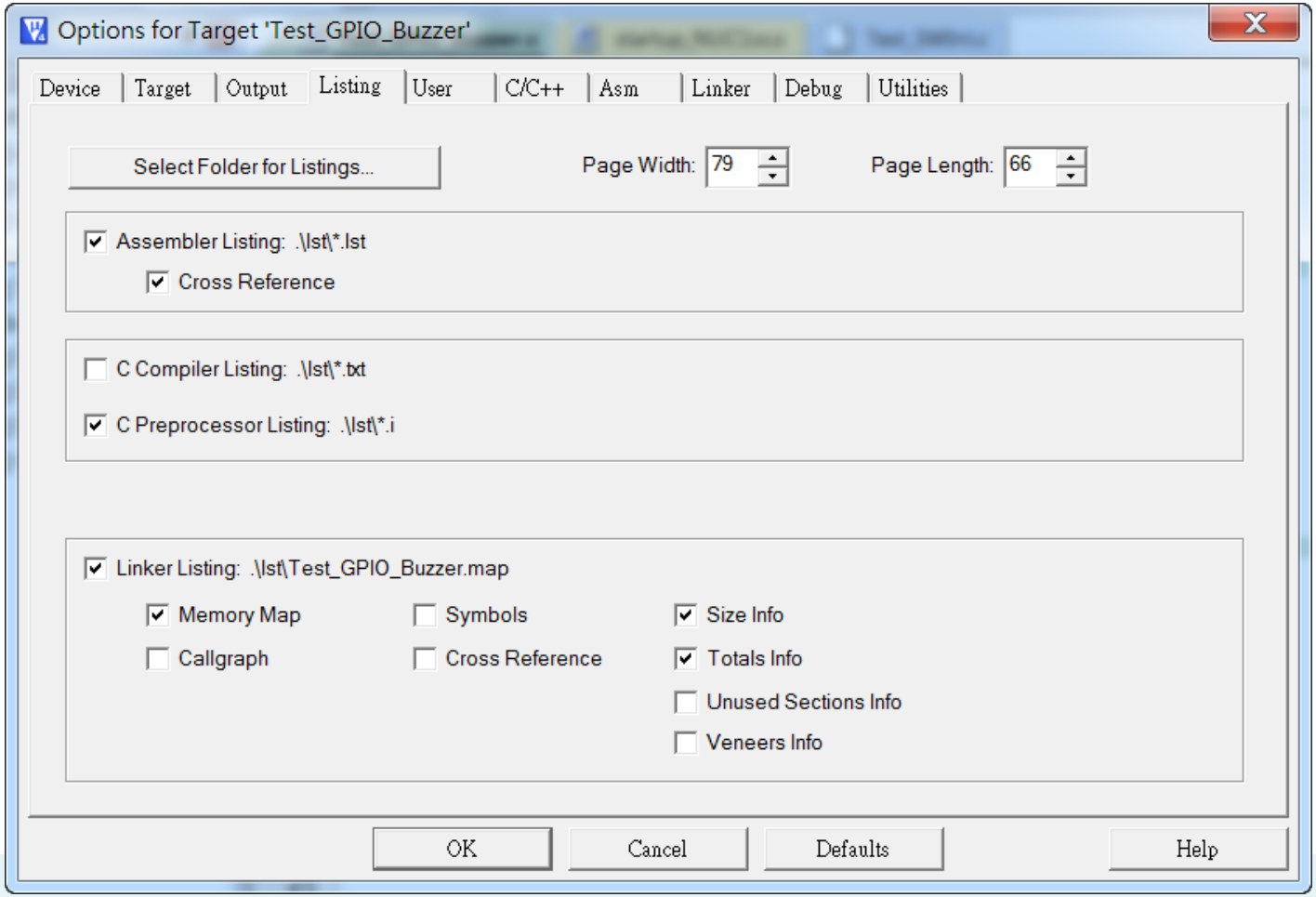

設定[Debug]：使用模擬器

- 點選Use Simulator

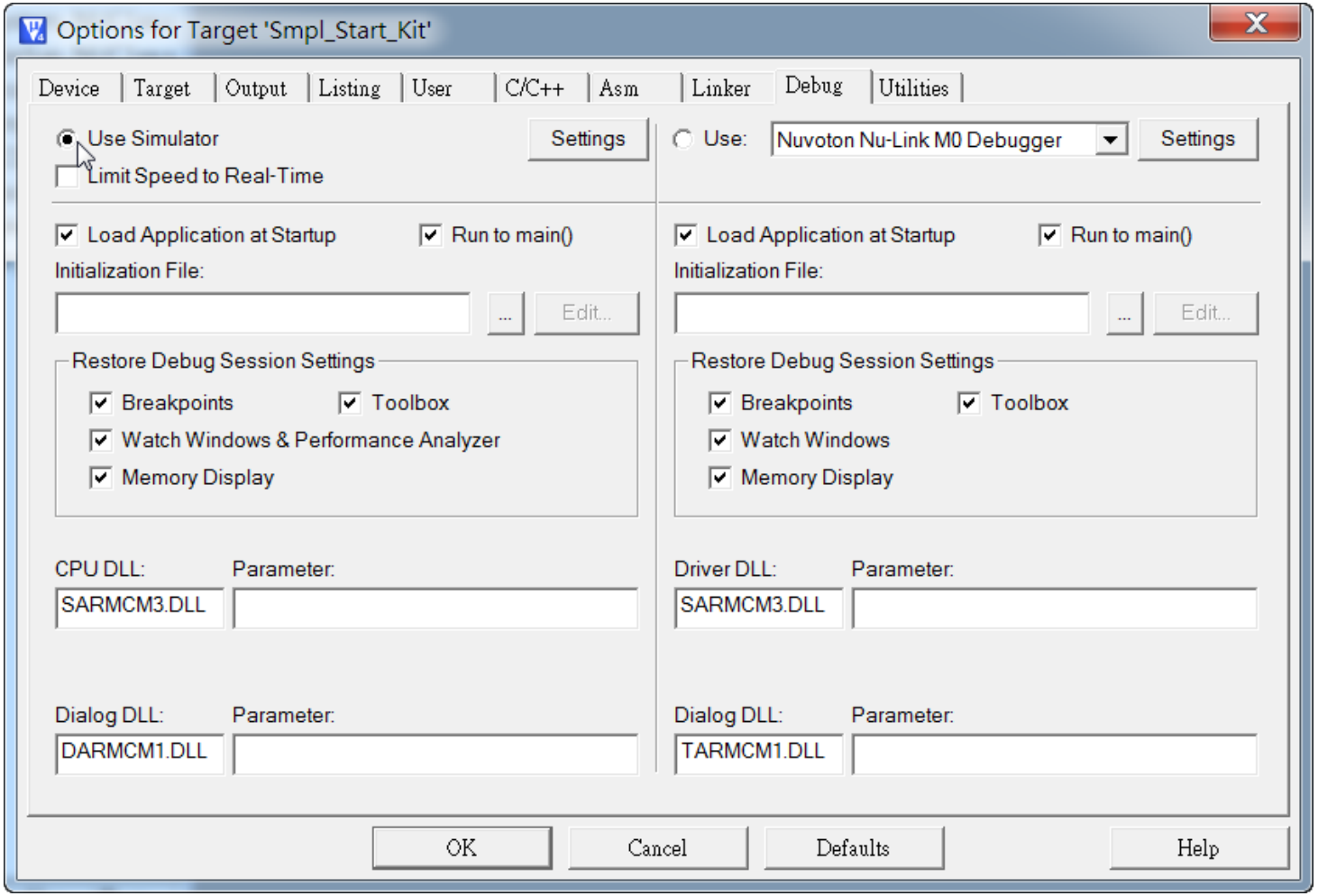

設定[Debug]：使用Nu-Link

- 點選Use:Nuvoton Nu-Link M0 Debugger

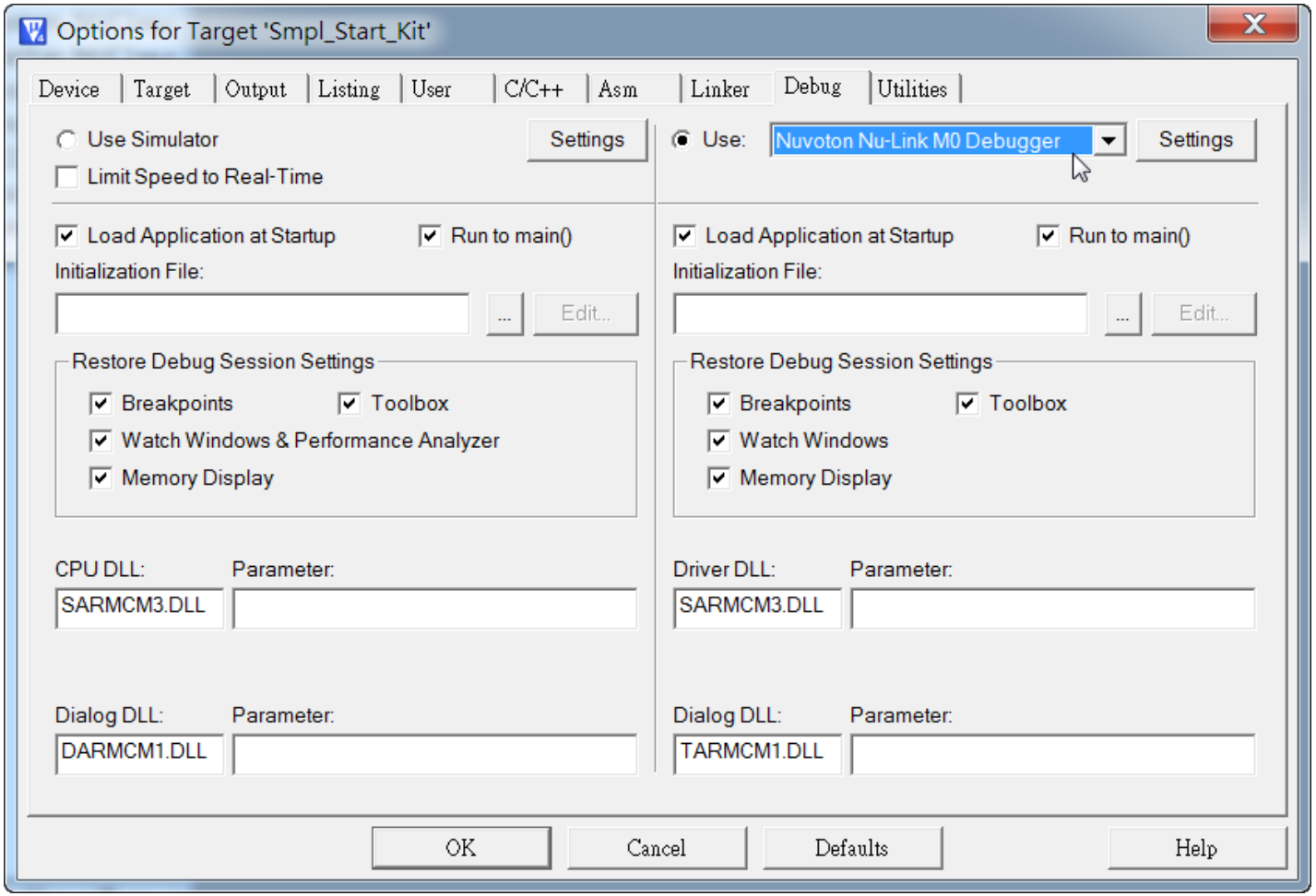

設定[Utilities]：

- 點選Use Target Driver for Flash Programming
- Nuvoton Nu-Link M0 Debugger

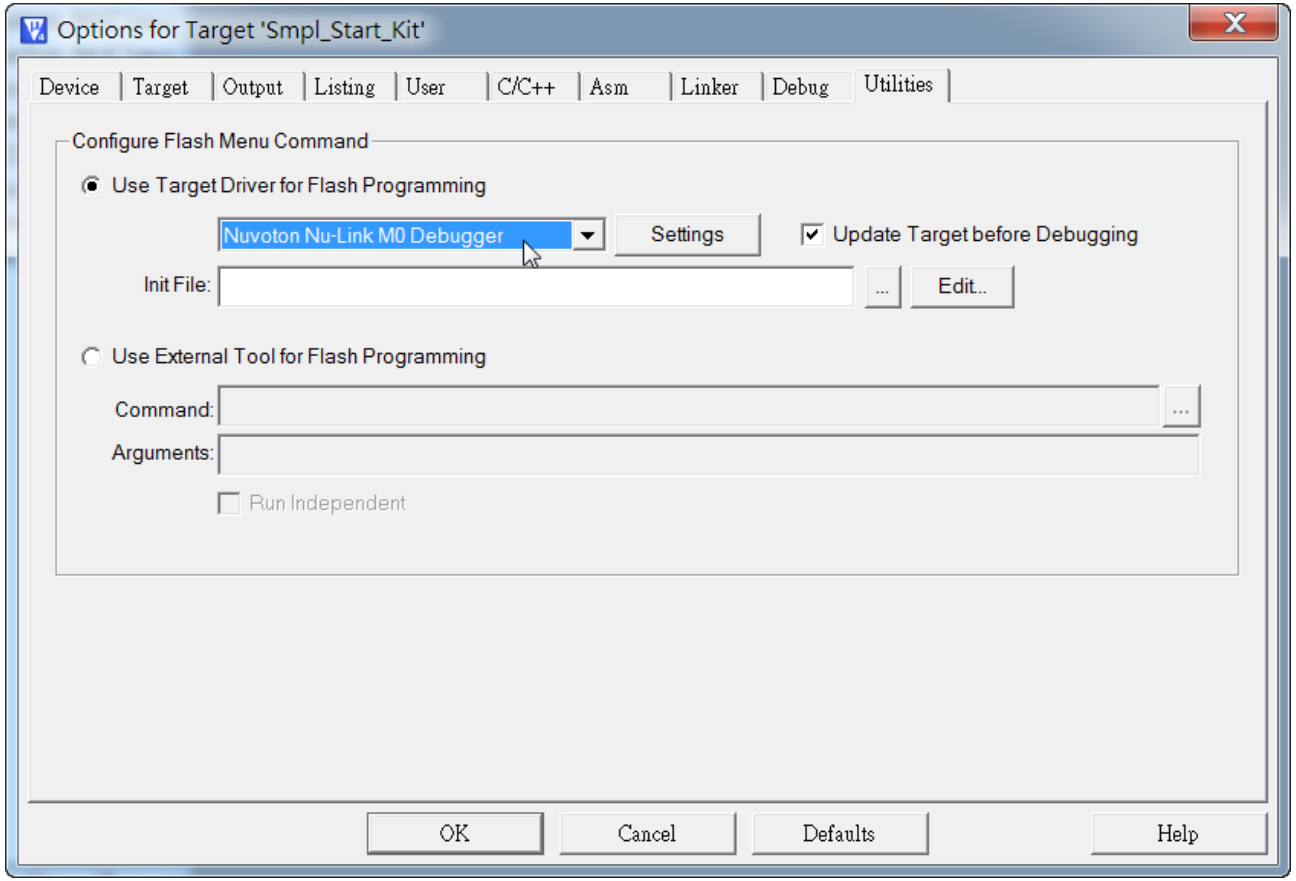

開啟檔案Smpl_Start_Kit.c

- 在檔案Smpl_Start_Kit.c連按二下

C:\nuvoton\NUC100SeriesBSP\NuvotonPlatform_Keil\Sample\NUC1xx-LB_002\Smpl_Start_Kit\Smpl_Start_Kit.uvproj - µVision4

File Edit View Project Flash Debug Peripherals Tools SVCS Window Help

Project

- Smpl_Start_Kit
  - CMSIS files
    - core_cm0.c
    - system_NUC1xx.c
    - startup_NUC1xx.s
  - Source files
    - Smpl_Start_Kit.c
    - LCD_Driver.c
    - Ascii_Table.C
    - Seven_Segment.c
  - Library files

Smpl_Start_Kit.c

```c
int main(void)
{
    int i=0,j=0;
   /* Unlock the protected registers */
   UNLOCKREG();
     /* Enable the 12MHz oscillator oscillation */
   DrvSYS_SetOscCtrl(E_SYS_XTL12M, 1);

      /* Waiting for 12M Xtal stalble */
     SysTimerDelay(5000);

   /* HCLK clock source. 0: external 12MHz; 4:internal 22MHz RC
   DrvSYS_SelectHCLKSource(0);
     /*lock the protected registers */
   LOCKREG();

   DrvSYS_SetClockDivider(E_SYS_HCLK_DIV, 0); /* HCLK clock fre
```

Step 5. 程式碼編譯與除錯

D:\data\book\02Nnuvoton\NUC100SeriesBSP\NuvotonPlatform_Keil\Sample\NUC1xx-LB_002\2.Test_Start_Kit\Test_Start_Kit....

File Edit View Project Flash Debug Peripherals Tools SVCS Window Help

sys_delay

Test_Start_Kit

Project

- Test_Start_Kit
  - CMSIS files
    - core_cm0.c
    - system_NUC1xx.c
  - Source files
    - LCD_Driver.c
    - Ascii_Table.C
    - Seven_Segment.c
    - Test_Start_Kit.c
    - startup_NUC1xx.s
  - Library files
    - DrvSPI.c
    - DrvSYS.c
    - DrvUART.c
    - DrvGPIO.c
    - retarget.c

startup_NUC1xx.s | Test_Start_Kit.c | startup_NUC1xx.s

```c
  TIMER0->TCSR.CRST = 1;     //Reset up counter
  TIMER0->TCSR.CEN = 1;    //Enable Timer0

    TIMER0->TCSR.TDR_EN=1;     // Enable TDR function
}

int main(void)
{
   int i=0,j=0;
  /* Unlock the protected registers */
  UNLOCKREG();
    /* Enable the 12MHz oscillator oscillation */
  DrvSYS_SetOscCtrl(E_SYS_XTL12M, 1);

     /* Waiting for 12M Xtal stalble */
    SysTimerDelay(5000);

  /* HCLK clock source. 0: external 12MHz; 4:internal 22MHz RC oscillat
  DrvSYS_SelectHCLKSource(0);
```

Build Output

```
User command #1: fromelf --bin ".\obj\Test_Start_Kit.axf" --output ".\obj\Test_Start_Kit.bin"
User command #2: fromelf --text -c ".\obj\Test_Start_Kit.axf" --output ".\obj\Test_Start_Kit.txt"
".\obj\Test_Start_Kit.axf" - 0 Error(s), 0 Warning(s).
```

Rebuild all target files | Nuvoton Nu-Link M0 Debugg

Step 6. 執行程式 (Start Debug)

- 點選Debug，會將新編譯的執行檔下載到開發板。
- 使用Debug的功能進行除錯，或按reset鍵重新執行。
- KEIL評估模式可以執行32K的程式碼

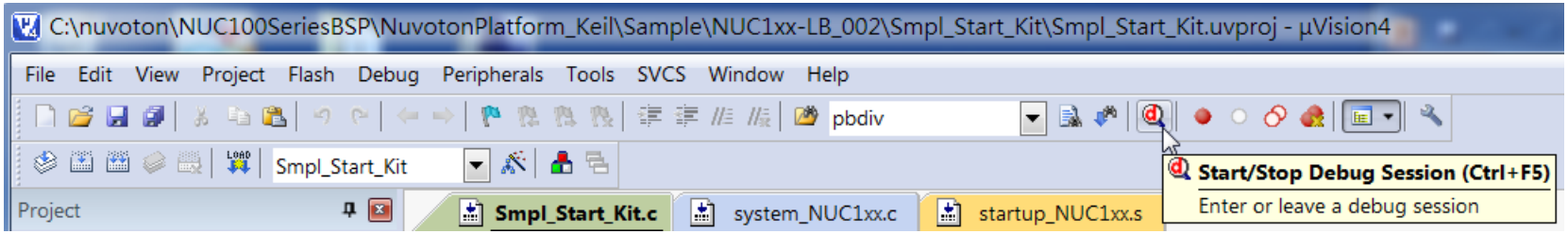

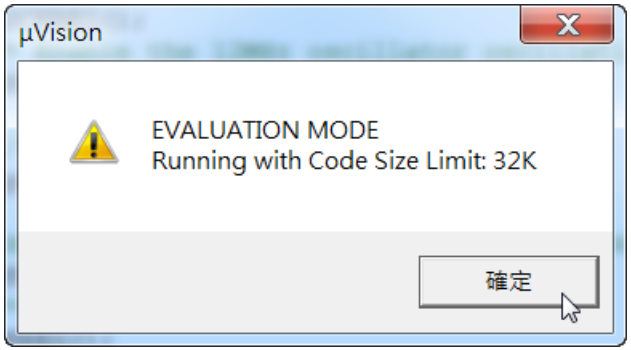

Step 6. 執行程式 (按下F5)

D:\data\book\02Nnuvoton\NUC100SeriesBSP\NuvotonPlatform_Keil\Sample\NUC1xx-LB_002\2.Test_Start_Kit\Test_Start_Kit....

File Edit View Project Flash Debug Peripherals Tools SVCS Window Help

sys_delay

Run (F5)
Start code execution

```
77:          int i=0,j=0;
78:         /* Unlock the protected registers */
0x00000EBC 2400      MOVS     r4,#0x00
```

startup_NUC1xx.s | Test_Start_Kit.c | startup_NUC1xx.s

```
74
75  int main(void)
76  {
77    int i=0,j=0;
78    /* Unlock the protected registers */
79    UNLOCKREG();
80      /* Enable the 12MHz oscillator oscillation */
81    DrvSYS_SetOscCtrl(E_SYS_XTL12M, 1);
82
83      /* Waiting for 12M Xtal stalble */
84     SysTimerDelay(5000);
85
```

Core: R0, R1, R2, R3, R4, R5, R6, R7, R8, R9, R10, R11, R12, R13 (SP), R14 (LR), R15 (PC), xPSR

Project | Registers

Command

```
Load "D:\\data\\book\\02Nnuvoton\\NUC100SeriesBSP\\NuvotonPlat
>
ASSIGN BreakDisable BreakEnable BreakKill BreakList BreakSet
```

Call Stack + Locals

Name	Location/Value	Type
main	0x00000EBC	int f()
i	<not in scope>	auto - int

Call Stack + Locals | Memory 1

Start code execution | Nuvoton Nu-Link M0 Debugg t1:

ICP & ISP 軟體工具簡介

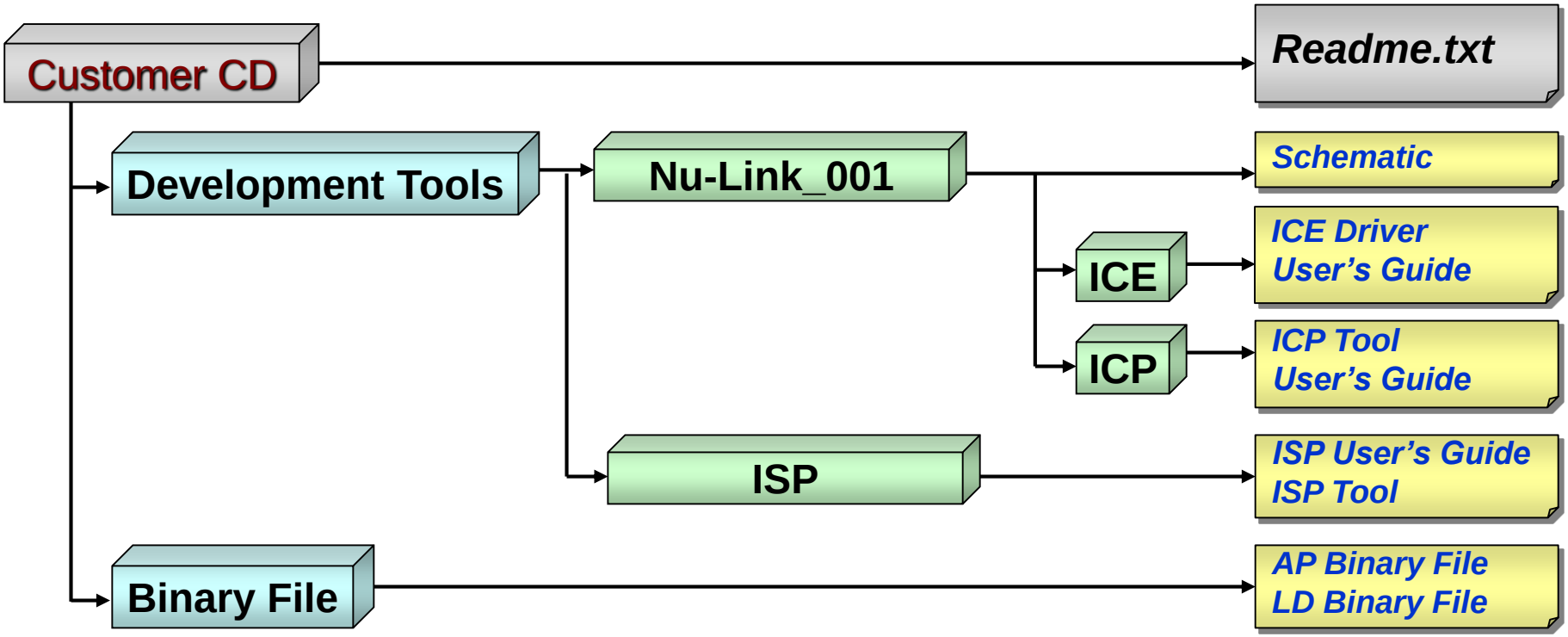

ICP AP software: "NuMicro ICP Programming Tools.exe"

ISP AP software:

In-Circuit Programming

- ICP的功能如同一個萬用的編碼器，不需要載入程式。可提供刪除、編碼、驗證、選項等功能。
- 燒錄範圍涵蓋整顆MCU, 包括APROM, DataFlash, CONFIG, LDROM 和ROMMAP
- 因為燒錄純粹是ICP 硬件的行為, MCU 無法自己更新自己
- 需要其他硬體支持（如NU-LINK等）

ICP (In-Circuit Programming)

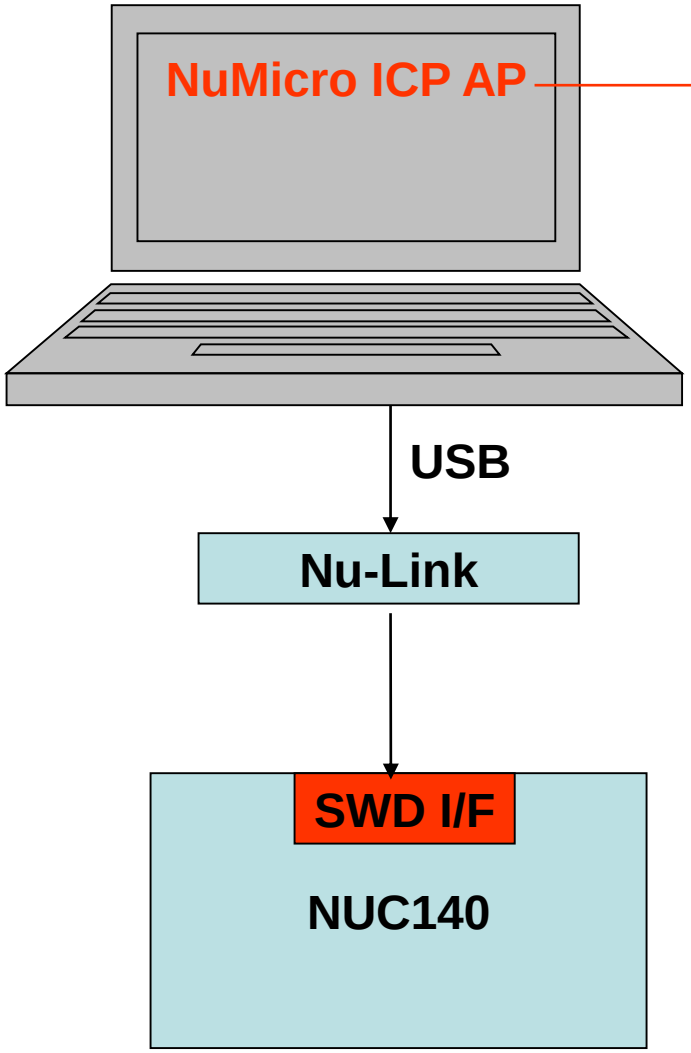

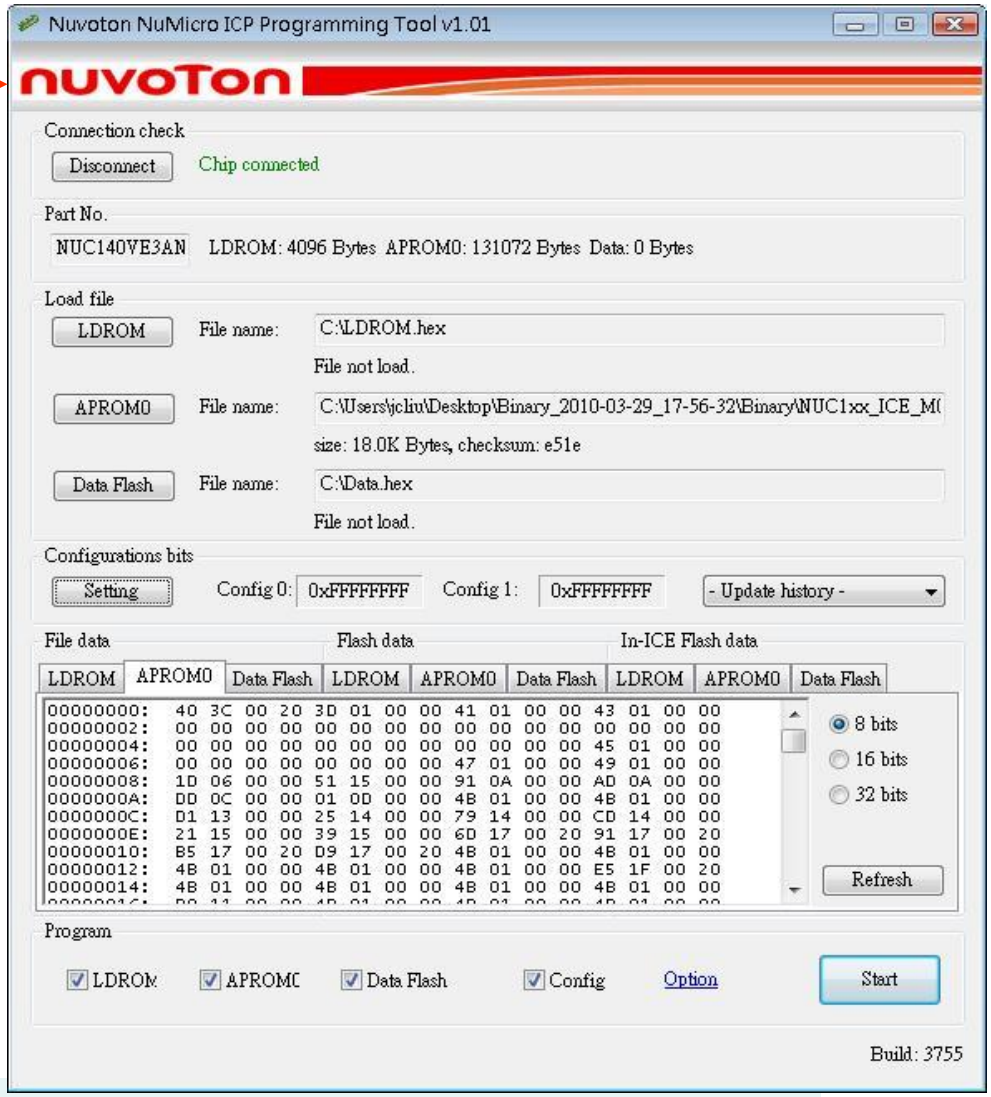

In-System Programming

- 在系統編程(ISP)可以將微處理器安裝到一塊電路板後，對微處理器規劃程式。早期的芯片必須從電路板取出，放置在一個編程設備，但今日的微控制器和外部記憶體不需要從電路板取出來，可以直接重新規劃程式。這就是所謂的在電路或在系統編程。
- ISP作為主機和微處理器之間的橋接器，藉由內部的載入程式提供新的程式碼。
- 燒錄範圍只限於APROM, DataFlash 或CONFIG
- 載入程式必須先置放在微處理器板的ISP記憶體，開機時從ISP記憶體啟動，執行ISP程式碼檢查是否執行ISP作業。接著從AP記憶體從新啟動，執行應用程式。
- 不需要額外硬體

To program ISP firmware code

Configuration bits setting

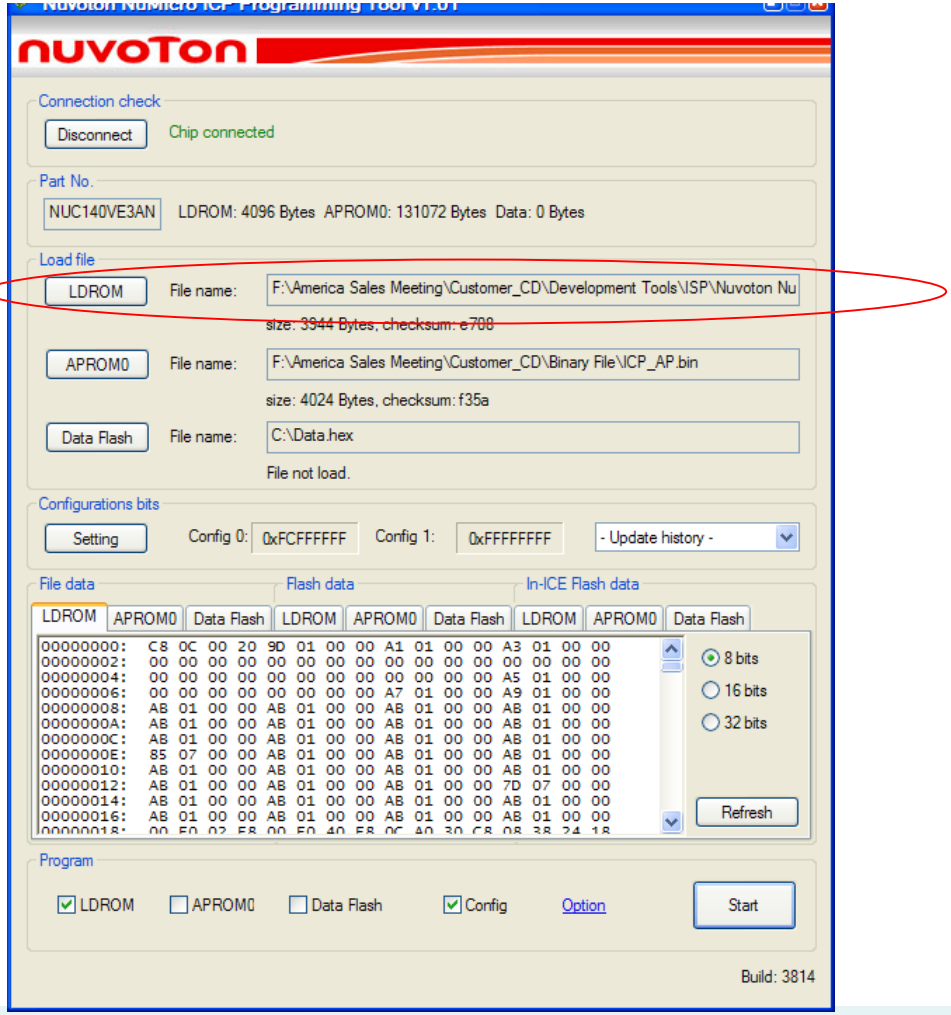

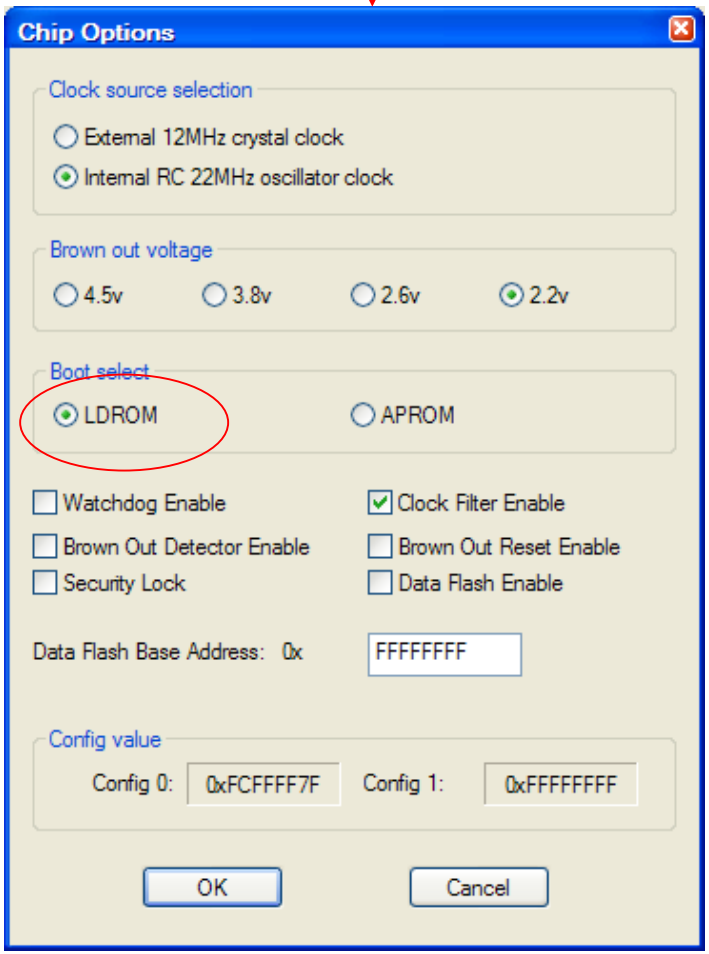

NuMicro ISP firmware code: ISP_LD_CODE.bin

ISP (In-System Programming)

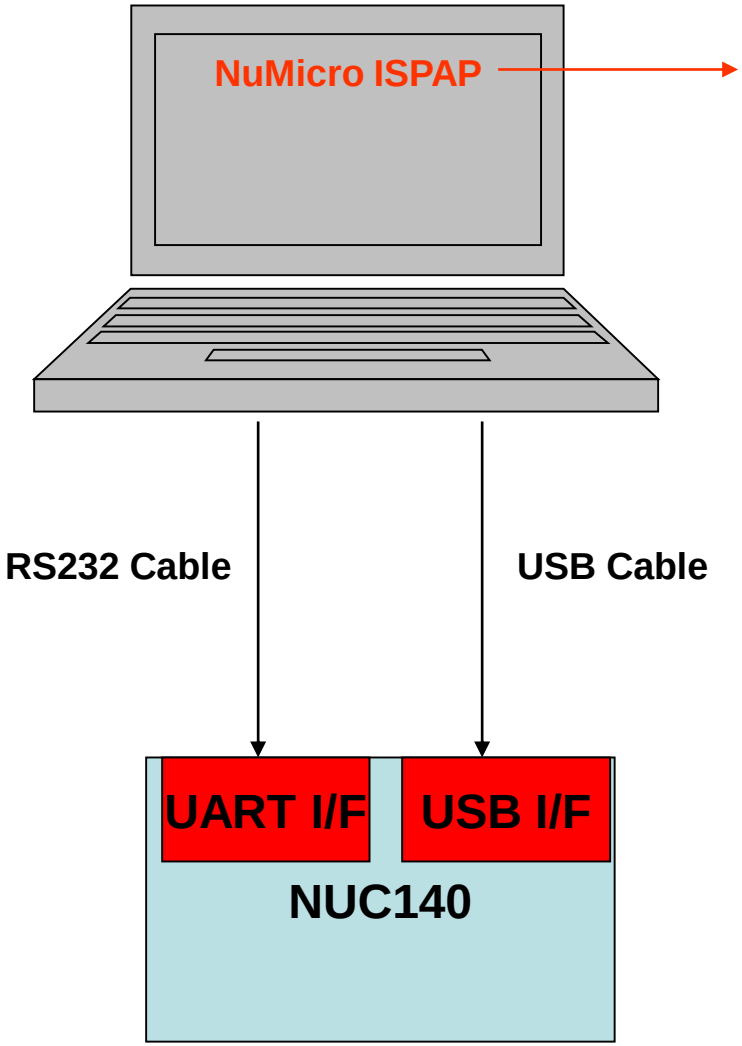

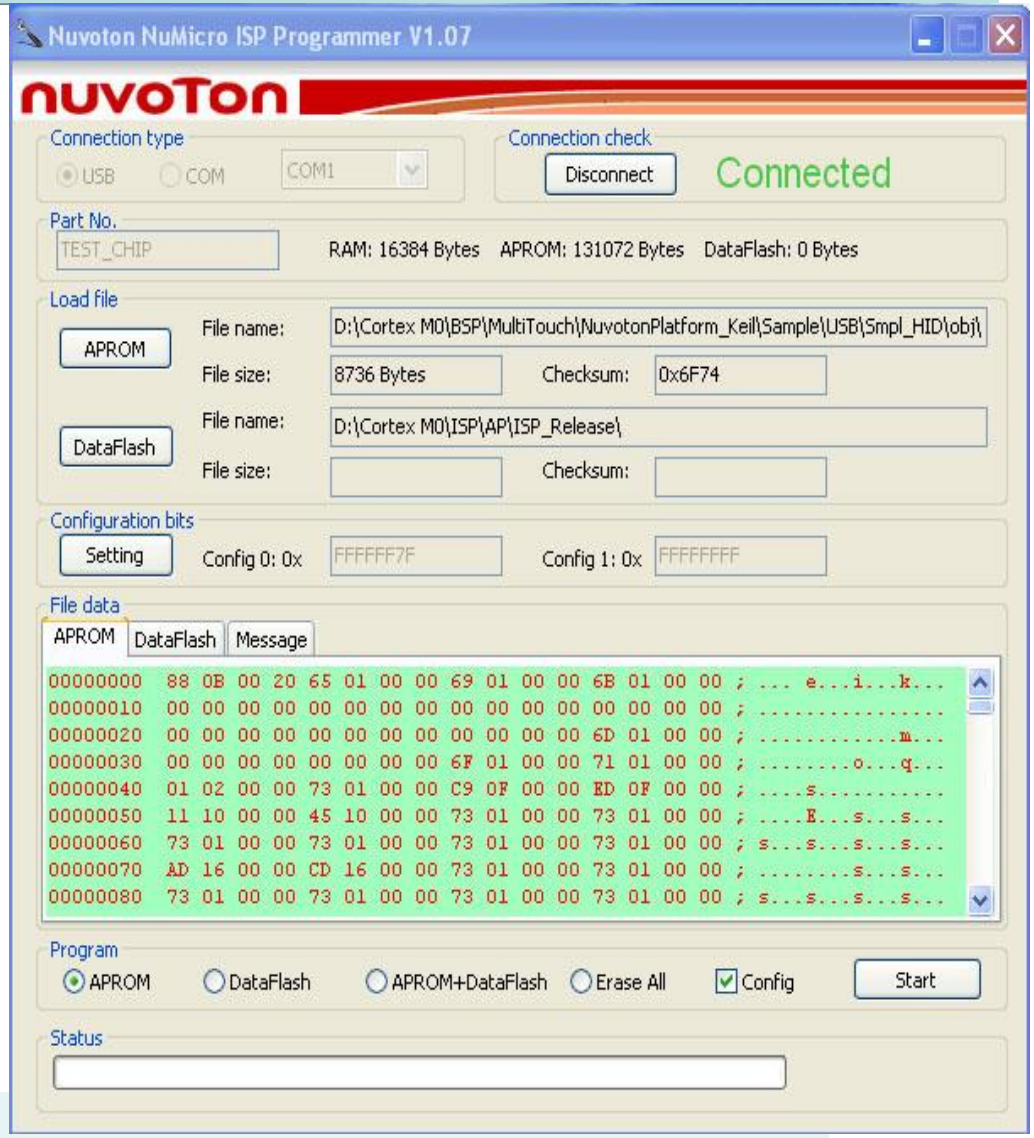

NuMicro ISP Firmware Flow Chart

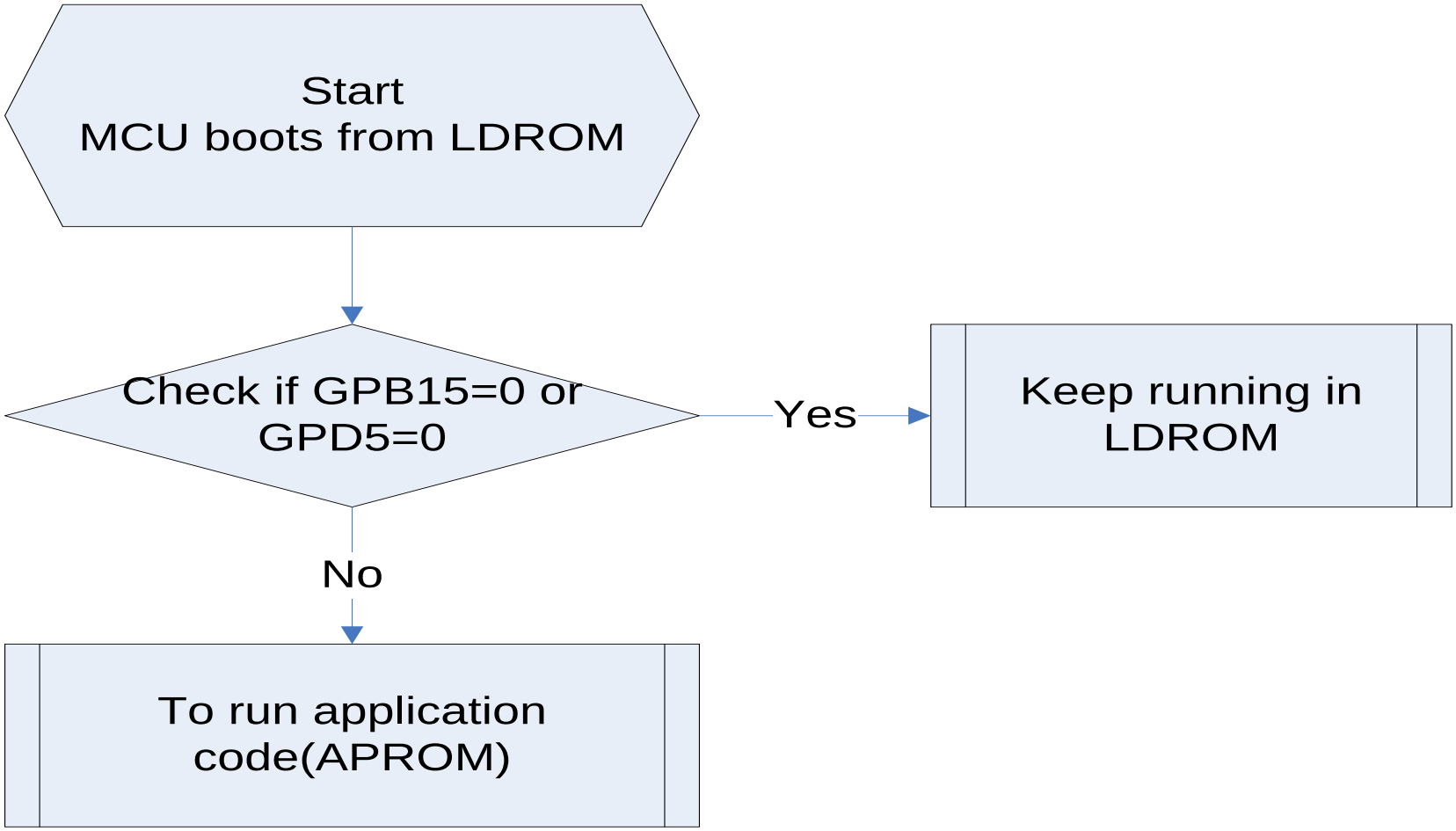

Keil開發環境中新計畫之建立 (1/2)

- 在NUC100SeriesBSP_v1.05.003.zip解壓縮的路徑 d:\nuvoton\nuc100seriesbsp\NuvotonPlatform_Keil\Sample\NUC1xx-LB_002建一個新的檔案夾“Smple_newname”
- d:\nuvoton\nuc100seriesbsp\NuvotonPlatform_Keil\Sample\NUC1xx-LB_002\ Smpl_newname
- 從新唐科技的現成範例中複製三個檔案到檔案夾“Smpl_newname”
  - smpl_xxxx.uvproj
  - smpl_xxxx.uvopt
  - smpl_xxxx.c
- 將複製的三個檔案改成新計畫的名稱
  - smpl_newname.uvproj
  - smpl_newname.uvopt
  - smpl_newname.c

Keil開發環境中新計畫之建立 (2/2)

- 到新檔案夾中，打開新的計畫(將smpl_newname.uvproj點兩下，Keil環境會將其叫出)
  - 游標點一下計畫[smpl_xxxx]，將名稱改成[smpl_newname]
  - 將游標指到[smpl_xxxx.c]，按滑鼠右鍵→會出現選項，選擇“remove file smpl_xxxx.c”
  - 再將游標指到程式源**Source fules**並按滑鼠右鍵→會出現選項，選擇“Add Files to Group source files”`, 點選檔案[smpl_newname]，Add，Close

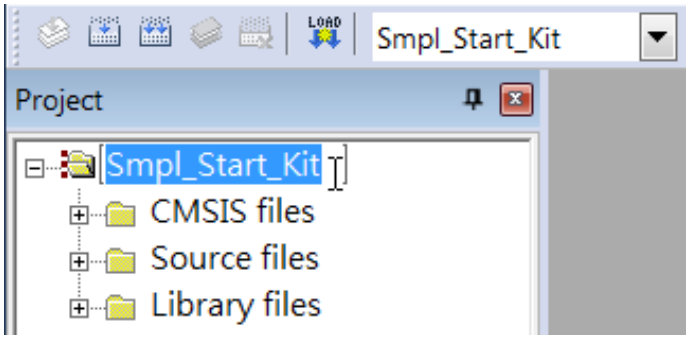

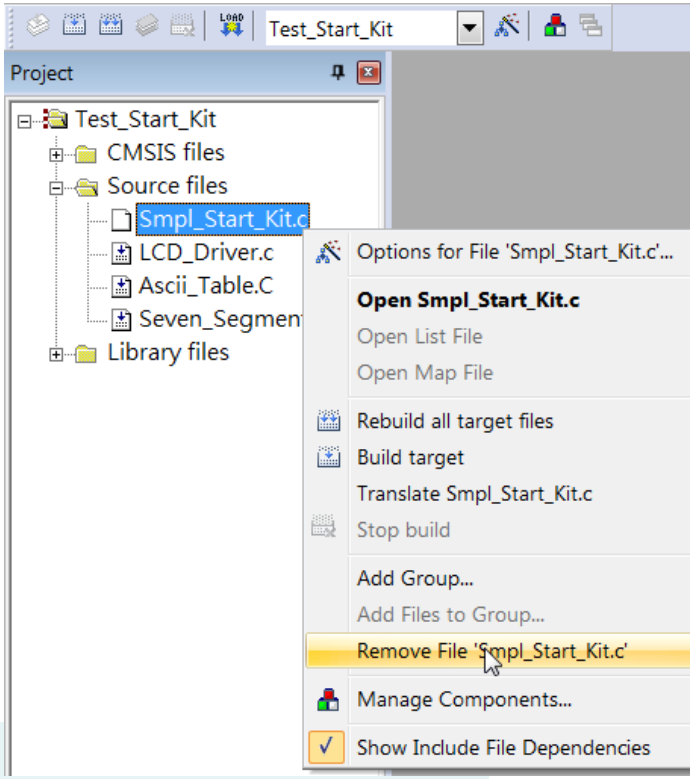

project編譯與韌體燒錄的步驟 (1/x)

- 在Keil 上方命令欄點選 **Flash**，選 Configure Flash Tools…，出現新視窗 Options for Target ‘Smpl_newname’
  - 選**Device**，確認目標裝置是 Nuvoton NUC140VE3AN
  - 選**Target**，設定振盪器頻率
  - 選**Output**，將輸出檔[Smpl_xxxx] 改成新計畫名稱[Smpl_newname]
  - 選**Listing**，取消[C Compiler Listing: .\lst*.i

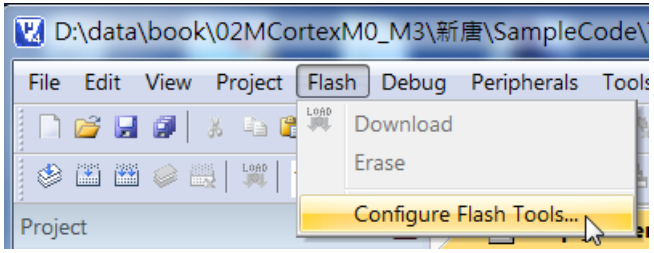

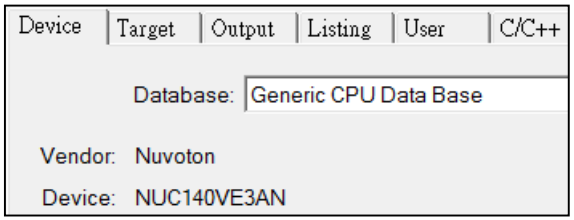

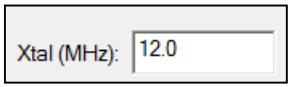

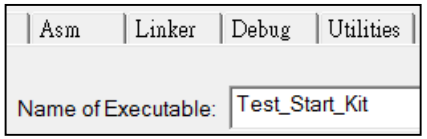

project編譯與韌體燒錄的步驟 (1/x)

– 選 **Debug**，選用 [Nuvoton Nu-Link M0 Debugger]

– 沒有硬體時，選用[Simulator]

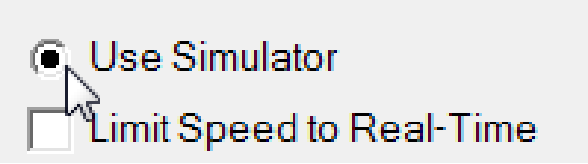

– 選**Utilities**，在[Use Target Driver for Flash Programming]選用 [Nuvoton Nu-Link M0 Debugger]

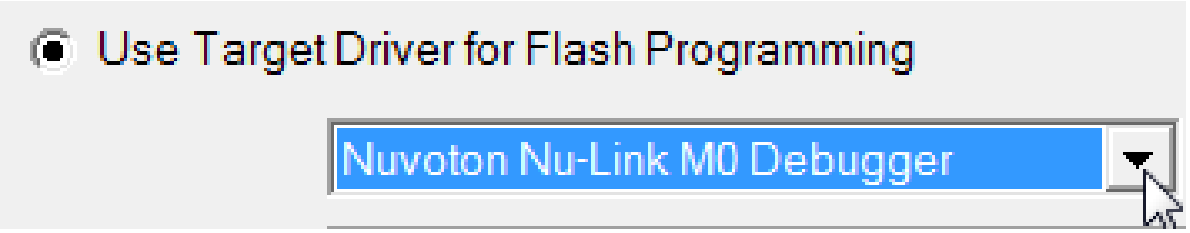

project編譯與韌體燒錄的步驟 (3/x)

- 編譯的錯誤可能是Include Paths的設定造成
  - 選**C/C++**，檢查Include Paths路徑的設定

Include Paths .\;..\..\..\..\CMSIS\CM0\CoreSupport;..\..\..\..\CMSIS\CM0\DeviceSupport\Nuvoton\NUC1xx;..\..\..\Include;..\..\..\In

.\; 表示目前工作資料匣

..\..\..\..\CMSIS\CM0\CoreSupport;

..\..\..\..\CMSIS\CM0\DeviceSupport\Nuvoton\NUC1xx;

..\..\..\Include;

..\..\..\Include\Driver;

..\..\..\Include\NUC1xx-LB_002

  - 注意上述的資料匣位置是否正確

Project的編譯步驟

- 編譯C程式(build)
  - 只有編譯重建與更改相關的檔案，無關的部分不處理
  - Keil上方命令欄中，按F7 / **Build Target**，或點上方命令欄之 **Project** 再選Build Target，
  - 在Build Output視窗檢視有無錯誤。如有錯誤, 則需對C程式除錯後，再重新編譯。
- 編譯C程式(rebuild)
  - 將所有的檔案重新編譯建立

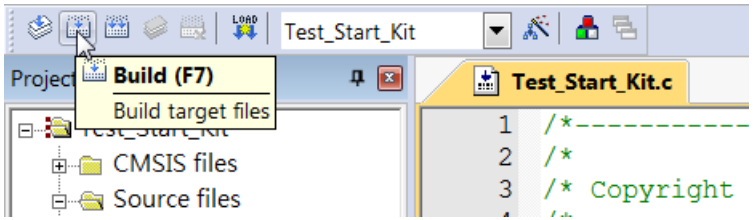

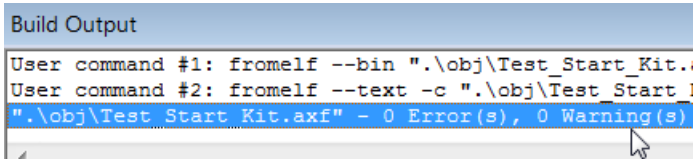

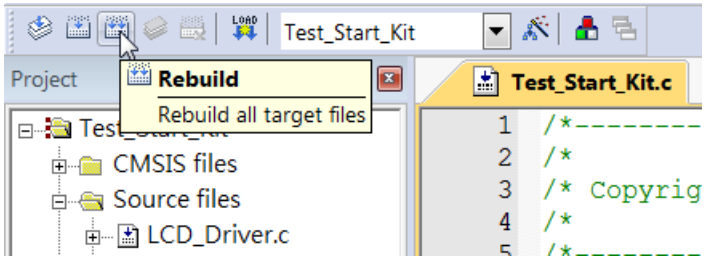

project的韌體燒錄步驟

- 如何下載二進碼到NUC140微處理單晶片中
  - 在編譯成功產生二進碼後，點選[**Download]**，或 點選上方命令欄之 **Flash** 再選 Download
  - 下載二進碼後，須按reset鍵重新執行

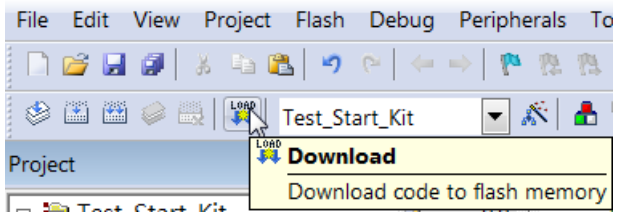

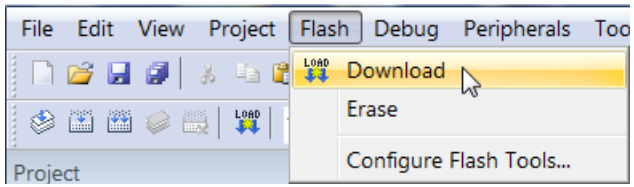

使用 printf 除錯之設定 (1/2)

- 設定將printf 輸出導到 UART0的步驟:

步驟 1. **startup_NUC1xx.s**

第10行FALSE改成TRUE

SEMIHOSTED SETL {TRUE}

步驟 2. **retarget.c 約16行加上**

#define DEBUG_ENABLE_SEMIHOST

(如果 retarget.c 沒有列入 Library files, 將它由 d:\nuvoton\nuc100seriesbsp\NuvotonPlatform_Keil\Src\Driver加入計畫)

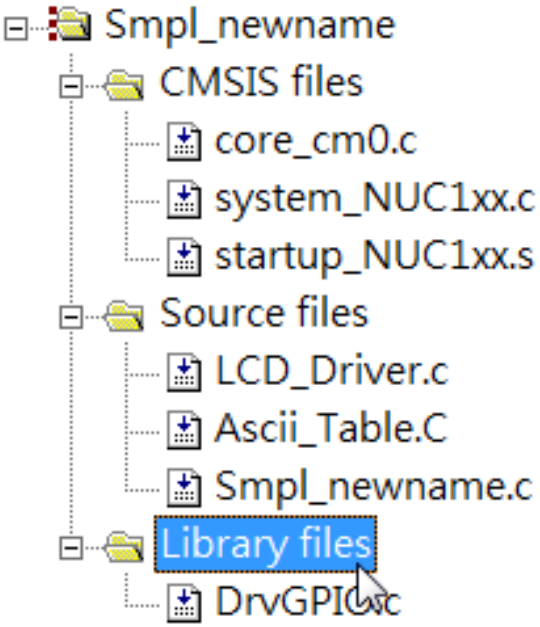

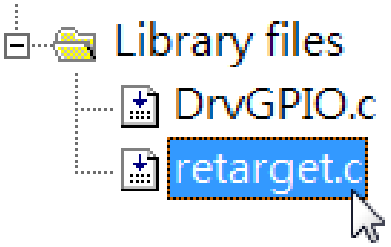

使用 printf 除錯之設定　　(2/2)

- 步驟3. 將printf 加入需要顯示資料/除錯之處
  printf(“Enter Initial setup\n”); 注意\n不能漏掉，否則訊息不會出現
  printf 會都列印至 UART0, 所以 printf 將會延緩程式執行。
  測試/除錯完畢，應將printf移除
- 步驟4. 編譯程式並燒錄到板子上
- 步驟5. 打開Keil Debugger Session, 打開 UART1 view window 視窗
  [View] [Serial Windows] [UART#1]
- 步驟6. 執行程式 (F5)

debug無法出現 port

- Q:在debug模式，如果出現圖1的狀況
- A:
- 1.滑鼠指到project視窗左上角，按右鍵，點選Options for Target..
- 2.點選[Device]
- 3.點選[NuMicro Cortex M0 Database]，不是使用[Generic CPU Data Base]
- 4.點選{Device]中的型號

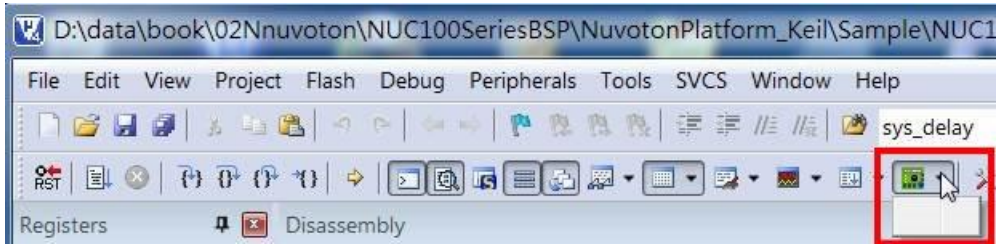

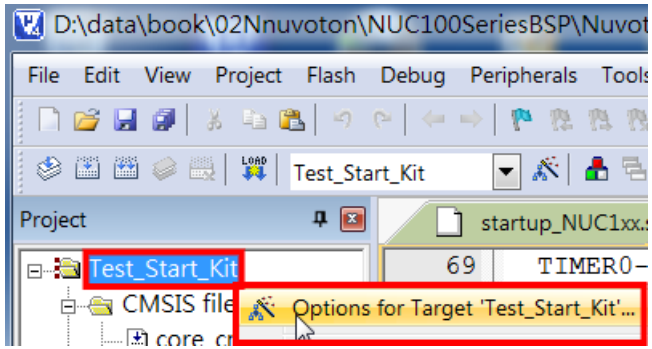

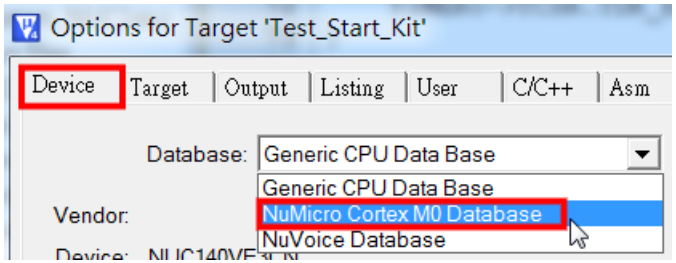

General Disclaimer

The Lecture is strictly used for educational purpose.

MAKES NO GUARANTEE OF VALIDITY

- **The lecture cannot guarantee the validity of the information found here.** The lecture may recently have been changed, vandalized or altered by someone whose opinion does not correspond with the state of knowledge in the relevant fields. Note that most other encyclopedias and reference works also have similar disclaimers.

No formal peer review

- The lecture is not uniformly peer reviewed; while readers may correct errors or engage in casual peer review, they have no legal duty to do so and thus all information read here is without any implied warranty of fitness for any purpose or use whatsoever. Even articles that have been vetted by informal peer review or *featured article* processes may later have been edited inappropriately, just before you view them.

No contract; limited license

- Please make sure that you understand that the information provided here is being provided freely, and that no kind of agreement or contract is created between you and the owners or users of this site, the owners of the servers upon which it is housed, the individual Wikipedia contributors, any project administrators, sysops or anyone else who is in *any way connected* with this project or sister projects subject to your claims against them directly. You are being granted a limited license to copy anything from this site; it does not create or imply any contractual or extracontractual liability on the part of Wikipedia or any of its agents, members, organizers or other users.
- There is **no agreement or understanding between you and the content provider** regarding your use or modification of this information beyond the Creative Commons Attribution-Sharealike 3.0 Unported License (CC-BY-SA) and the GNU Free Documentation License (GFDL);

General Disclaimer

Trademarks

- Any of the trademarks, service marks, collective marks, design rights or similar rights that are mentioned, used or cited in the lectures are the property of their respective owners. Their use here does not imply that you may use them for any purpose other than for the same or a similar informational use as contemplated by the original authors under the CC-BY-SA and GFDL licensing schemes. Unless otherwise stated , we are neither endorsed by nor affiliated with any of the holders of any such rights and as such we cannot grant any rights to use any otherwise protected materials. Your use of any such or similar incorporeal property is at your own risk.

Personality rights

- The lecture may portray an identifiable person who is alive or deceased recently. The use of images of living or recently deceased individuals is, in some jurisdictions, restricted by laws pertaining to personality rights, independent from their copyright status. Before using these types of content, please ensure that you have the right to use it under the laws which apply in the circumstances of your intended use. *You are solely responsible for ensuring that you do not infringe someone else's personality rights.*